Service Manual

Houdini Quick Reference Guide

WWW.AMERICAN-PINBALL.COM
DOC0001-03

AMERICAN
• PINBALL •

100th Anniversary Edition Updates

The following is a list of unique changes in the 100th Anniversary Edition of Houdini, released in 2026.

- Standard Interior Art Blades
- Topper
- Shaker
- Knocker
- Magic Glass
- Steampunk Flippers

The following changes were made for improved performance:

- Hanging Chains removed to prevent jams and stuck balls
- Four speaker setup updated to 2 speaker setup using higher quality speakers

WARNING! **STOP AND READ - UNPLUGING BOARD CONNECTORS WHILE THE MACHINE IS POWERED ON CAN, AND MOST LIKELY WILL, DESTROY THE BOARD!!! THIS IS NOT COVERED UNDER AMERICAN PINBALL'S WARRANTY AND YOU ARE RESPONSIBLE FOR A REPLACEMENT BOARD, WITH NO EXCEPTIONS.**

General questions
info@americanpinball.com

Service or Warranty requests
Service@americanpinball.com
833-API-HELP

API Tech Tip Videos
https://www.youtube.com/channel/UC9_k0XRo6IbeyeOuQy4Hseg/videos

LIMITED WARRANTY

American Pinball Inc. (“Seller”) warrants only the original purchaser of its products that the items listed below are free from defects in material & workmanship under normal use and service for the specified warranty period. Warranties are non-transferrable.

COVERAGE

The Limited Warranty covers defective workmanship and materials as follows:

1. **All parts of the Pinball Machine, excluding standard plastic, bumper post, rubber rings and wear & tear parts for 90 days from the date of invoice or shipment by Distributor.**
2. **The main LCD monitor for 1 Year from the date of invoice or shipment by Distributor.**

CONDITIONS

The original purchaser must register the Limited Warranty by completing the Product Registration Form on the American Pinball Website within fifteen days of receipt. In the event of a warranty for the above Coverage to apply, the Original Purchaser must open a trouble ticket on American-pinball.com or call 1-833-API-HELP (274-4357). Service related questions can also be sent via e-mail to service@american-pinball.com.

Defective parts need to be sent to American Pinball at the purchaser’s expense, if the defective parts cannot be removed, the entire Pinball Machine will need to be returned to the Distributor for repair or replacement. All parts returned must be properly packaged with an RMA tag/Trouble ticket then returned freight prepaid to the Sellers facility.

EXCLUSIONS

The Limited Warranty does not cover service, labor, or shipping and handling. Damage, wear, and/or breakage not caused by defective materials or workmanship shall not be covered by the Warranty. Damage incurred during shipping and handling shall not be covered by the Warranty.

DISCLAIMER OF IMPLIED WARRANTY

Except as specifically provided in a written contract between Seller and Purchaser, there are no other warranties, express or implied, including any implied warranties of merchantability or fitness for a particular purpose.

DISCLAIMER OF DAMAGE

This Warranty does not apply to any parts damaged due to improper handling or due to improper installation, usage or alteration. In no event shall the Seller be held liable for any anticipated profits, loss of profits, loss of use, accidental or consequential damages or any other losses incurred by the customer regarding the purchase of an AMERICAN PINBALL, INC. product.

CAUTIONS, WARNINGS & NOTICES

CAUTION! **FOR SAFETY AND RELIABILITY, DO NOT SUBSTITUTE PARTS, EQUIPMENT OR ADD GAME CIRCUITRY MODIFICATIONS. SUCH MODIFICATIONS MAY ADVERSELY AFFECT GAME PLAY OR CAUSE INJURIES AND MAY RESULT IN VOIDING IN THE WARRANTY. ALWAYS TRANSPORT PINBALL GAMES WITH THE HINGED BACKBOX IN THE FOLDED POSITION. CONTACT AUTHORIZED SERVICE PERSONNEL BEFORE PERFORMING ANY REPAIR. ANY SUCH REPAIRS SHOULD BE PERFORMED WITH THE LINE VOLTAGE DISCONNECTED. FOR SERVICING TIPS, REFERENCE THE USER MANUAL OR CONTACT AMERICAN PINBALL INC TECHNICAL SUPPORT. SUBSTITUTION OF PARTS AND EQUIPMENT MAY VOID FCC TYPE ACCEPTANCE.**

WARNING! **STOP AND READ - UNPLUGING BOARD CONNECTORS WHILE THE MACHINE IS POWERED ON CAN, AND MOST LIKELY, WILL DESTROY THE BOARD!!! THIS IS NOT COVERED UNDER AMERICAN PINBALL'S WARRANTY AND YOU WILL ARE RESPONSIBLE FOR A REPLACEMENT BOARD, WITH NO EXCEPTIONS.**

WARNING! **OPENING THE COIN DOOR EXPOSES HIGH VOLTAGE PARTS IN THE GAME, AND DIRECT CONTACT TO THESE HIGH VOLTAGE PARTS CAN LEAD TO SERIOUS OR FATAL INJURIES. THIS EQUIPMENT IS ONLY TO BE SERVICED BY TRAINED PROFESSIONALS ONLY.**

NOTICES

Cable harness placements and ground strap routing in the game have been designed to keep RF radiation and conduction within levels accepted by the FCC rules. To maintain these levels, reposition harnesses and reconnect grounds to their original placements, if they become disconnected.

COMPLIANCE, LEGAL AND WARNINGS

FCC CLASS A SUBPART J COMPLIANCE

This equipment has been tested and found to comply with the limits for a Class A digital device, pursuant to part 15 of the FCC Rules. These limits are designed to provide reasonable protection against harmful interference when the equipment is operated in a commercial environment. This equipment generates, uses, and can radiate radio frequency energy and, if not installed and used in accordance with the instruction manual, may cause harmful interference to radio communications. This equipment is intended to be operated in a commercial environment, operation of this equipment in a residential area may cause interference with other devices, the user will be solely responsible for correcting all interference at their own expense.

RF INTERFERENCE NOTICE

CABLE HARNESS PLACEMENTS AND GROUND STRAP ROUTING have been designed to keep RF radiation and conduction within levels accepted by FCC rules.

DO NOT ALTER WIRING OR GROUND STRAPPING. Position wiring and ground strap back to their original position if they become lose or are removed for service.

LEGAL

HOUDINI, MASTER OF MYSTERY and all related characters are trademarks of American Pinball. MAGICGLASS and this manual are trademarks of American Pinball. Any reproductions or modifications are illegal.

WARNINGS

American Pinball authorized parts are to be used only. Using ANY unauthorized parts will void all warranties and may cause injury to persons or property.
All servicing of equipment must be completed by competent service personnel. Pinball machines are complex and present an electrical shock hazard. Not following these guidelines can be fatal.

DOCUMENT REVISION HISTORY

100-1001r0	January 2018	Initial Release of Document
100-1001r1	August 2018	Updated unpacking instructions, settings, and diagrams
100-1001r2	Oktober 2021	Updated address, added QR codes

REGIONAL CONTACTS

AMERICAN PINBALL
500 S. HICKS RD
PALATINE, IL 60067
847.893.6800
833.API.HELP

CONTENTS

Coverage ..... -iv
Conditions ..... -iv
Exclusions ..... -iv
Disclaimer of Implied Warranty ..... -iv
Disclaimer of Damage ..... -v
CAUTIONS, WARNINGS & NOTICES ..... -v
NOTICES ..... -vi
Compliance, Legal and Warnings ..... -vi

1 Overview 1-1

About This Manual 1-1

2 Unpacking Instructions 2-3

Unpacking Houdini 2-3
Tools Required For Unpacking 2-3
To unpack Houdini 2-3
Leveling Houdini 2-11

3 Service Menu 3-13

Houdini Service Menu 3-13
API Cockpit 3-14
Tests 3-15
To access Houdini's Tests menu 3-17
Switch Testing 3-18
Coil Testing 3-19
LED Testing 3-19
Display Test 3-19
Cabinet Tests 3-19
Stage Mechanism Testing 3-19
Coil Adjustment Settings 3-20
To access Houdini's Coils settings 3-20
Houdini Coil Setup 3-20
To calibrate coils after moving or re-leveling Houdini 3-20
Features Adjustment Settings 3-22
To access Houdini's Feature settings 3-22
Pricing Adjustment Settings 3-26
To access Houdini's Pricing settings 3-26
Replay Adjustment Settings 3-28
To access Houdini's Replay settings 3-28
Sound Adjustment Settings 3-29

To access Houdini's Sound settings 3-29
Standard Adjustment Settings 3-31
To access Houdini's Standard Adjustments settings 3-31
Presets 3-32
To access Houdini's Presets 3-32
Statistics 3-34
To access Houdini's Statistics menu 3-34
Utilities 3-36
To access Houdini's Utilities menu 3-36

4 Switch Locations 4-39

Dedicated Switch Locations 4-39
Playfield Switch Map 4-41

5 Coil Locations 5-43

Coil Locations 5-43
Playfield Coil Map 5-44
Fuses 5-45

6 P-ROC Boards 6-47

Theory of Operation 6-48
P3-ROC Functional Descriptions 6-49
Section 2: SW-16 Boards 6-62
SW-16 overview 6-62
To install the SW-16 Board hardware 6-67
To install the SW-16 Driver Board software 6-67
Section 3: P-ROC PD-16 Driver Boards 6-68
P-ROC Power Driver 16 Overview 6-68
P-ROC Power Driver connectors 6-69
P-ROC Board Address Configuration 6-71
Protection 6-73
Watchdog 6-74
Flyback Diodes 6-74
Serial Chain Termination 6-74
PDB Protocol 6-74
To install the P-ROC Driver Board hardware 6-76
If using Bank A to install the P-ROC Driver Board 6-76
I using Bank B to install the P-ROC Driver Board 6-77
To install the driver board software 6-77
Section 4: PD LED-2 Boards 6-77
PD LED-2 Overview 6-77
PD-LED-2 Programming 6-78
To change the color of an individual LED 6-78
To fade an LED's color 6-79
Enabling a Serial Chain 6-79
To enable one or more serial LED chains 6-79
Serial chain Manager Configuration 6-79

To configure the Serial Chain Manager 6-80
Configuring the Serial Chain Controllers 6-80
To configure a Serial Chain Controller: 6-80
PDB Protocol 6-87
To install the P-ROC LED Board hardware 6-88
Section 5: Board Drawings and Parts 6-89

7 Assemblies, Posts & Ring Locations....7-119

Assemblies 7-119
3 Ball Lock Assembly 7-120
3 Ball Under Trough Assembly 7-121
6 Ball Under Trough Assembly 7-123
ADJ Down Post 7-125
Adj Down Post 2 7-127
ADJ Up Post 7-129
Back Box Assembly 7-130
Back Panel Assembly 7-133
Catapult Assembly 7-134
Left Flipper Assembly 7-136
Left Flipper Crank Link Assembly 7-138
Line Filter Assembly 7-139
Ramp Assembly 7-140
Ramp Sign Assembly 7-141
Right Flipper Assembly 7-142
Spotlight (Left Flipper) Assembly 7-145
Spotlight (Right Flipper) Assembly 7-146
Stage Mech Assembly 7-147
Stage Mech Breakdown Assembly 7-149
Stage Monitor Assembly 7-151
Steamer Trunk Assembly 7-152
Steamer Trunk Diverter Assembly 7-154
Subway Assembly 7-155
Super VUK Scoop Assembly 7-156
Trunk Switch Assembly 7-158
Trunk Up Post Assembly 7-159
VUK Assembly 7-160
Post and Ring Locations 7-162

8 Houdini Game Rules....8-167

Houdini Game Rules Overview 8-167
Skill shot 8-167
Stage Modes 8-167
Basic Stage Modes 8-168
Special Stage Modes 8-168
Movie Modes 8-169
Magic Shop 8-169
Jail Escape Hurry-Ups 8-170
Secret Missions 8-170
Trunk Multiball 8-170

Seance Multiball 8-171
Outlane Drain Modes 8-171
Milkcan Multipliers 8-172
Master Magician (Wizard) Mode 8-173
Stacking 8-173

9 Houdini Code Update 9-175

Code Update Procedure 9-175
To download Houdini Code to a Microsoft Windows PC 9-176
To download Houdini Code to a MAC 9-176
To update Houdini code 9-176
Houdini Log Copy 9-179
To copy game logs 9-179

10 Miscellaneous Diagrams 10-1

About This Chapter 10-1

LIST OF FIGURES

Open Carton 2-3
Carton View After Laying On Side 2-4
Remove Corner Protectors 2-4
Pull Game Out By Center Strap 2-5
Remove Bottom Corner Protectors 2-5
Game Out of Box 2-6
Game Upright 2-6
Cut Shrink Wrap 2-6
Install Leg Mounting Hardware 2-7
Remove Shrink Wrap From Rear Legs 2-7
Houdini Lifted on Back Legs 2-8
Houdini Raised on Back Legs 2-8
Shrink Wrap Removal 2-8
Houdini Head Raised 2-9
Securing Head in Place. 2-9
Securing Head in Place. 2-10
Houdini Before Trim Removal 2-10
Service Menu Navigation Buttons 3-14
Service Menu Navigation Buttons 3-17
Tests Menu 3-17
Switch Testing Menu 3-18
Playfield Switch Map 4-41
Playfield Coil Map 5-44
P3-ROC Block Diagram 6-48
SW-16 Board Usage 6-67
Power Driver 16 Usage 6-76
PCB005 Servo Board Drawing 6-89
PCB005 Schematic 6-90
PCB009 All Layers 6-91
PCB009 Bottom View 6-91
PCB009 Top View. 6-92
PCB009 Schematic 6-92
PCB0010 All Layers 6-93
PCB0010 Bottom View 6-93
PCB0010 Top View. 6-93
PCB010 Schematic 6-94
PCB0011 All Layers 6-94
PCB0011 Bottom View 6-95
PCB0011 Top View. 6-95
PCB011 Schematic 6-95
PCB012 All Layers 6-96
PCB012 Bottom View 6-97
PCB012 Top View. 6-98
PCB012 Schematic 6-99

PCB0013 All Layers 6-99
PCB0013 Bottom View 6-100
PCB0013 Top View 6-100
PCB013 Schematic 6-100
PCB014 All Layers 6-101
PCB014 Bottom View 6-101
PCB014 Top View 6-101
PCB014 Schematic 6-102
PCB015 All Layers 6-103
PCB015 Bottom View 6-104
PCB015 Top View 6-105
PCB015 Schematic 6-106
PCB016 All Layers 6-106
PCB016 Bottom View 6-107
PCB016 Top View 6-107
PCB016 Schematic 6-108
PCB0019 Rev 00 Ball Trough Receiver Drawing 6-109
PCB0019 Rev 00 Ball Trough Receiver Drawing v2 6-109
PCB0019 Rev 00 Schematic 6-110
PCB019-01 Rev 00 Ball Trough Transmitter Drawing 6-111
PCB019-01 Rev 00 Ball Trough Transmitter Drawing v2 6-111
PCB019-01 Rev 00 Schematic 6-112
PCB0020 Rev 01 Opto Interface Board v1 6-113
PCB0020 Rev 01 Opto Interface Board v2 6-113
PCB0020 Rev 01 Schematic 6-114
PCB0021 Add On Driver Board v1 6-115
PCB0021 Add On Driver Board v2 6-115
PCB0021 Schematic 6-116
PCB0022 Layout 6-117
PCB0022 Schematic 6-117
3 Ball Lock Assembly Drawing 7-120
3 Ball Lock Assembly Drawing 7-120
3 Ball Under Trough Assembly Drawing 7-121
3 Ball Under Trough Assembly Drawing 7-121
6 Ball Under Trough Assembly Drawing 7-123
Adj Down Post Assembly 7-125
Adj Down Post Assembly Drawing 7-125
Adj Down Post 2 Assembly 7-127
Adj Down Post 2 Assembly Drawing 7-127
Adj Up Post Assembly 7-129
Adj Up Post Assembly Drawing 7-129
Back Box Assembly - Detailed 7-130
Back Box Assembly 7-131
Back Panel Assembly 7-133
Catapult Assembly - Detailed 7-134
Catapult Assembly 7-135
Left Flipper Assembly - Detailed 7-136
Left Flipper Assembly - Detailed 7-137
Left Flipper Crank Link Assembly 7-138
Line Filter Assembly 7-139
Ramp Assembly 7-140
Ramp Sign Assembly 7-141

Right Flipper Assembly 7-142
Right Flipper Assembly Detailed 7-144
Spotlight (Left Flipper) Assembly 7-145
Stage Mech Assembly 7-147
Stage Mech Assembly 7-149
Stage Monitor Assembly 7-151
Steamer Trunk Assembly 7-152
Steamer Trunk Diverter Assembly 7-154
Subway Assembly 7-155
Super VUK Scoop Assembly 7-156
Trunk Switch Assembly 7-158
Trunk Up Post Assembly 7-159
VUK Assembly 7-160
Post Locations 7-163
Rubber Ring Locations 7-164
Bullet Catch Mode 8-168
Jail Escape Hurry-Up 8-170
SEANCE Multiball 8-171
Outlane Drain Modes 8-172
Milkcan Multiplier 8-172
Houdini Code Update Message 9-177
Houdini Code Update Complete 9-177
Cabinet Diagram 10-2
Power Block Diagram 10-3
Transformer Diagram 10-3
Transformer Wiring Diagram 10-4
Dipswitch Settings Diagram 10-5

LIST OF TABLES

Service Menu Icons 3-14
Tests Menu Icons 3-16
API Cockpit Navigation 3-18
Coil Adjustment Settings 3-21
Features Adjustment Settings 3-23
Price Table 3-27
Pricing Adjustment Settings 3-27
Replay Adjustment Settings 3-28
Sound Adjustment Settings 3-30
Standard Adjustment Settings 3-31
Preset Settings table 3-33
Game Statistics 3-34
Utilities 3-37
Dedicated Switch Table 4-39
Coil Locations Table 5-43
Fuse Table 5-45
Houdini Board Parts Number table 6-47
P3-ROC Dipswitches 6-50
P3-ROC Power LED Voltage Indication table 6-51
P3-ROC FPGA LED Voltage Indication table 6-51
P3-ROC
J1 Power Connector table 6-52
P3-ROC
J2 Power Connector table 6-52
P3-ROC
J3 Burst Switch table 6-52
P3-ROC
J4 Burst Switch table 6-53
P3-ROC
J5 Burst Switch table 6-54
P3-ROC
J6 Burst Switch table 6-55
P3-ROC
J7 Burst Switch table 6-55
P3-ROC
J8 Burst Switch table 6-56
P3-ROC
J9 Burst Switch table 6-57
P3-ROC
J10 Burst Switch table 6-58
P3-ROC
J11 Serial Switches table 6-59
P3-ROC
J12 Serial Drivers table 6-59

P3-ROC
J13 USB table 6-59
P3-ROC
J14 Serial Switches table 6-59
P3-ROC
J15 Serial Drivers table 6-60
P3-ROC
J16 JTAG Port table 6-60
P3-ROC
J17 I2C table 6-60
P3-ROC
J18 Auxiliary Port table 6-61
P3-ROC
J19 GPIO table 6-61
SW-16: J1 Power Connector table 6-63
SW-16: J2 Bank A Switch Inputs table 6-63
SW-16: J3 Serial Data In table 6-63
SW-16: J4 Serial Data Out table 6-64
SW-16: J6 Bank B Switch
Inputs table 6-64
SW-16 Board Address Dipswitch table 6-64
SW-16 Board ID table 6-65
SW-16 Status LEDs table 6-65
SW-16 LED Dipswitches table 6-65
SW-16 Register Device Type table 6-66
SW-16 Register Board ID table 6-66
SW-16 Register Bank A Switches table 6-66
SW-16 Register Bank B Switches table 6-66
Power Driver 16
J1 Logic Power table 6-69
Power Driver 16
J9 Logic Serial Data In table 6-69
Power Driver 16 J10
Serial Data Out table 6-69
Power Driver 16 J5
Bank A High Power In table 6-69
Power Driver 16 J3
Bank A High Power Out table 6-70
Power Driver 16 J7 Bank A
Device Power Inputs table 6-70
Power Driver 16 J6
Bank B High Power In table 6-70
Power Driver 16 J4
Bank B High Power Out table 6-71
Power Driver 16 J11
Bank B Device Power Inputs table 6-71
Power Driver 16 Address Dipswitches table 6-71
Power Driver 16
Address table 6-72
Power Driver 16 LEDs
for Driver Board table 6-73
Power Driver 16 Switches for

Driver Board table 6-73
Power Driver 16
PDB Protocol table 6-74
PD-LED-2 J1 Logic Power table 6-80
PD-LED-2 J2 Serial Data In table 6-81
PD-LED-2 J3 Serial Data Out table. 6-81
PD-LED-2 J5 LED Drivers table 6-81
PD-LED-2 J9 LED Drivers table 6-82
PD-LED-2 J6 LED Drivers table 6-82
PD-LED-2 J10 LED Drivers table 6-83
PD-LED-2 J7 LED Drivers table 6-83
PD-LED-2 J11 LED Drivers table 6-83
PD-LED-2 J8 LED Drivers table 6-84
PD-LED-2 Status LEDs table 6-85
PD-LED-2 Dipswitches table. 6-85
PD-LED-2 Board Address Dipswitch table 6-85
PD-LED-2 Serial Bus Direct Registers table. 6-86
PD-LED-2 Direct Data Register table 6-86
PD-LED-2 Serial Chain Enable Register table 6-87
PD-LED-2 Serial Bus (PDB) Protocol table. 6-88
Board Parts for PCB005 6-90
Board Parts for PCB009 6-92
Board Parts for PCB010 6-94
Board Parts for PCB011 6-96
Board Parts for PCB012 6-99
Board Parts for PCB013 6-100
Board Parts for PCB014 6-102
Board Parts for PCB016 6-108
Board Parts for PCB0019 Rev 00 6-110
Board Parts for PCB019-01 Rev 00 6-112
Board Parts for PCB0020 Rev 01 6-114
Board Parts Number for PCB0021 6-116
Board Parts Number for PCB0022 6-118
Parts for 3 Ball Lock Assembly 7-120
Parts for 3 Ball Under Trough Assembly. 7-122
Parts for 6 Ball Under Trough Assembly. 7-123
Parts for Adj Down Post Assembly 7-126
Parts for Adj Down Post 2 Assembly 7-128
Parts for Adj Up Post Assembly 7-129
Parts for Back Box Assembly 7-131
Parts for Back Panel Assembly. 7-133
Parts for Catapult Assembly 7-135
Parts for Left Flipper Assembly. 7-137
Parts for Left Flipper Crank Link Assembly. 7-139
Parts for Line Filter Assembly 7-140
Parts for Ramp Assembly 7-140
Parts for Ramp Sign Assembly 7-141
Parts for Right Flipper Assembly. 7-143
Parts for Right Flipper Assembly Detailed 7-144
Parts for Spotlight (Left Flipper Assembly. 7-145
Parts for Spotlight (Right) Flipper Assembly 7-146
Parts for Stage Mech Assembly 7-147

Parts for Stage Mech Breakdown Assembly 7-149
Parts for Stage Monitor Assembly 7-151
Parts for Steamer Trunk Assembly 7-153
Parts for Steamer Trunk Diverter Assembly 7-154
Parts for Subway Assembly 7-156
Parts for Super VUK Scoop Assembly 7-157
Parts for Trunk Switch Assembly 7-158
Parts for Trunk Up Post Assembly 7-159
Parts for VUK Assembly 7-161
Basic Stage Modes 8-168
Special Stage Modes 8-169
Movie Modes 8-169
Outlane Drain Modes 8-171

OVERVIEW

1

ABOUT THIS MANUAL

This manual details the integral aspects of the Houdini pinball machine.
The following chapters are included in this manual:

Chapter	Title
Chapter 1	Overview
Chapter 2	Unpacking Instructions
Chapter 3	Service Menu
Chapter 4	Switch Locations
Chapter 5	Coil Locations
Chapter 6	P-ROC Boards
Chapter 7	Assemblies & Post Locations
Chapter 8	Houdini Game Rules
Chapter 9	Houdini Code Update Procedure
Chapter 10	Miscellaneous Diagrams

UNPACKING INSTRUCTIONS

2

UNPACKING HOUDINI

In order to fully enjoy Houdini in the manner it is designed to be played, please adhere to the following unpacking instructions.

CAUTION! HOUDINI WEIGHS IN EXCESS OF 250 LBS. AT LEAST TWO PEOPLE ARE REQUIRED TO UNPACK AND MANEUVER THE MACHINE.

TOOLS REQUIRED FOR UNPACKING

- A pair of scissors or utility knife
- Supplied Allen wrench

To unpack Houdini

1. **Your Houdini machine should appear in the following carton.**
2. **Using a pair of scissors, carefully cut the bands that are highlighted with the red arrows.**

Figure 2.1 Open Carton

3. **Carefully lay the carton onto the “TRUCK THIS SIDE ONLY” side.**
4. **Remove the two foam pieces from inside the carton.**

Figure 2.2 Carton View After Laying On Side

5 **Remove the 2 top corner protectors (highlighted in the following picture).**

Figure 2.3 Remove Corner Protectors

6 **Pull the game out by the center strap.**

Figure 2.4 Pull Game Out By Center Strap

7 **Remove the four legs from the bottom corner protectors.**

Figure 2.5 Remove Bottom Corner Protectors

8 **Slide the game completely out of the box.**

Figure 2.6 Game Out of Box

9 **With assistance, stand the game upright.**

Figure 2.7 Game Upright

10 **Cut the shrink wrap by the front legs.**

Figure 2.8 Cut Shrink Wrap

11 **Install the legs with the supplied hardware.**

Figure 2.9 Install Leg Mounting Hardware

12 **Lay the game down and cut away the shrink wrap covering the rear leg mounting area.**

Figure 2.10 Remove Shrink Wrap From Rear Legs

13 **Carefully lift the game and rest it either on your knee or on a stool.**

14 **Install the two rear legs with the included hardware.**

Figure 2.11 Houdini Lifted on Back Legs

15 **Now install the two front legs with the included hardware.**

16 **Once legs are installed, return the game to normal resting position.**

Figure 2.12 Houdini Raised on Back Legs

17 **Cut and remove the center band, remove the remaining shrink wrap, and the two cardboard protectors from the machine.**

Figure 2.13 Shrink Wrap Removal

18 **Lift the head and insert the supplied Allen wrench into the locking mechanism.**

Figure 2.14 Houdini Head Raised

19 **Turn the Allen wrench clockwise to secure the head in place.**

Figure 2.15 Securing Head in Place

CAUTION! BE CAREFUL TO NOT PINCH THE WIRES WHEN LIFTING THE HEAD INTO UPRIGHT POSITION.

20 **Remove the keys from the ball shooter.**

One set of keys is for the coin door; the other set is for the backbox.

21 **Open the coin door and move the lockdown handle to the left and pull up on the front trim.**

Figure 2.16 Securing Head in Place

22 **Remove the trim from the clear protector.**

Figure 2.17 Houdini Before Trim Removal

23 **Pull the glass off and follow the supplied instructions that are attached to playfield.**

ENJOY YOUR GAME!

24 **Go to American Pinball's website www.american-pinball.com/support/register/ to register your pinball machine.**

Product registration only takes a few minutes to complete and provides the following benefits:

- Game support
- Warranty information

Video showing how to register your game: https://youtu.be/LsoqXcbKZzE

25 **Verify the game version installed on your machine is the most current.**

Note: If you need to update the game version on your machine, refer to the Houdini Code Update chapter in this manual.

Video showing how to update the gamecode: https://youtu.be/_n4-7ZSH3UE

LEVELING HOUDINI

Your game is designed to sit at a **6 degree pitch**. However, depending on the floor, you may have to adjust
so that the game is properly leveled left to right and or at the proper pitch. With the leg levelers all the way in (no threads showing below the leg) the game will sit approximately at 6 degrees.

PHONE APPLICATIONS FOR LEVELING

iPhone: PinGuy https://apps.apple.com/de/app/pinguy/id782973821

Video showing how to use: https://www.youtube.com/watch?v=SiM7aMIoCjc

Android: Pinball Leveler
https://play.google.com/store/apps/details?id=com.nottud.pinballleveller&hl=en_US&gl=US

Need help? CALL 833-API-HELP

SERVICE MENU

3

Video showing how to use the service menus: https://youtu.be/nKcwKNgNhCw

HOUDINI SERVICE MENU

This chapter includes service menu settings. The service menu accesses the following settings for optimal play and maintenance:

- Tests
- Settings
- Statistics
- Utilities
- Health Meter

Before You Begin

- Have you unpacked your Houdini machine and set it up according to the instructions in this manual?
- Have you downloaded the most current supported code from American Pinball's Support site?

Note: Settings are occasionally updated. Please refer to American Pinball's Support site for the most current documentation.

WARNING! **OPENING THE COIN DOOR EXPOSES HIGH VOLTAGE PARTS IN THE GAME, AND DIRECT CONTACT TO THESE HIGH VOLTAGE PARTS CAN LEAD TO SERIOUS OR FATAL INJURIES. THIS EQUIPMENT IS ONLY TO BE SERVICED BY TRAINED PROFESSIONALS ONLY.**

API COCKPIT

Houdini's service menu contains tests for all the electrical and mechanical functions within the game.

Figure 3.1 Service Menu Navigation Buttons

Table 3.1 Service Menu Icons

Tests		**<u>This includes tests in the following areas:</u>** • Switches • Coils • LEDs • Display • Cabinet • Stage Mechanical
Settings		**<u>This includes adjustments for the following settings:</u>** • Coil Adjustment Settings • Feature Adjustment Settings • Presets Adjustment Settings • Pricing Adjustment Settings • Replay Adjustment Settings • Sound Adjustment Settings • Standard Adjustment Settings
Statistics		**<u>This includes audits for the following statistics:</u>** • Basic Statistics • Earning Statistics • Feature Statistics • Game Time Statistics • Score Breakdown Statistics • Standard Statistics

Utilities

This includes information for the following utilities:

- Clear Houdini Balls
- Clear Audits
- Set Date and Time
- Reset Default Settings
- Stage Calibration

Health Meter - Green

The Health Meter provides a quick analysis of the overall state of Houdini

Houdini is in a healthy state.

Health Meter - Yellow

Houdini may have a switch issue that needs to be addressed.

Health Meter - Red

Houdini is in an unhealthy state. Refer to the Houdini Service Manual or contact your American Pinball distributor.

TESTS

The Tests menu includes a number of diagnostic tests for assuring that your machine is performing at its optimal health. The Tests menu provides tests for the following items:

- Switches
- Coils
- LEDs
- Display
- Cabinet
- Stage Mechanical

Table 3.2 Tests Menu Icons

Switches	
Coils	
LED	
Display	
Cabinet	
Stage Mechanical	

To access Houdini's Tests menu

1. **Power on the machine.**
2. **Open the coin door.**
3. **Press the MENU SELECT button to access the service mode.**

Figure 3.2 Service Menu Navigation Buttons

4. **Press the red +/- button to select the Tests icon.**
5. **Press the MENU SELECT button to enter Tests.**

Figure 3.3 Tests Menu

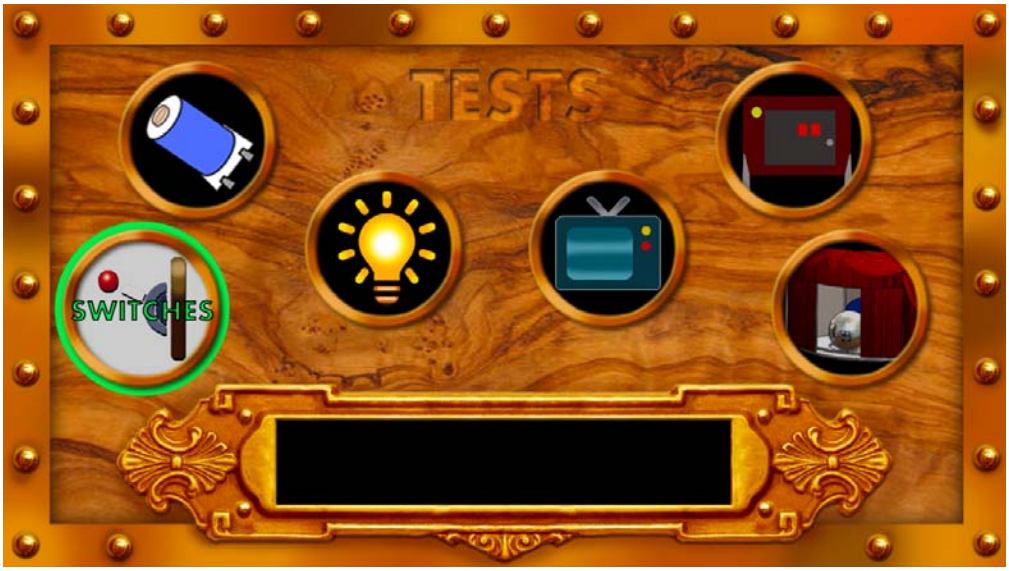

6. **Use the flipper buttons to toggle through the different tests.**

Table 3.3 API Cockpit Navigation

API Cockpit Button	Flipper Button Equivalent	Functionality
Green	Press left and right flipper buttons simultaneously	• Back one level • Exit
Red (+)	Right flipper	• Increase through menu by one • Advance to the right or down
Red (-)	Left flipper	• Decrease through menu by one • Advance to the left or up
Black	Start	• Menu Enter • Select current choice

SWITCH TESTING

Switch tests are a form of diagnostics that displays a grid of all the switches on the matrix. A switch test can be performed using either a finger, or ideally, a pinball.

1: The dark green color indicates a closed switch, which is an opto switch. Each column in the table represents a different board on the system.

2: The bright green color indicates that there is currently a ball or the switch is activated. A switch turns green when it is enabled.

3: The switch test displays wire colors for the respective switch, which board is active, and the last switch that was activated.

4: Additional switch information includes the last five switch hits.
For example, Left Lock 1, Left Lock 2, Left Lock 3, Inner Loop, Right Inner Loop.

Figure 3.4 Switch Testing Menu

lock and trough switch testing example: https://youtu.be/xggBiPS_y70

Note: For a more extensive description of each switch within Houdini, refer to the Switch Locations chapter.

COIL TESTING

To test coils, you must close the coin door in order to provide power.
Press the start button to disable or enable Coil testing.

Note: For a more extensive description of each coil within Houdini, refer to the Coil Locations chapter.

LED TESTING

When first entering LED Test, all LEDs flash on the playfield, rotating through red, green, blue. Each LED has three LED tests, which allows you to quickly see if there are any abnormal color patterns.

You also have the ability to walk through the LEDs one-by-one. LED testing is designed to follow the playfield in a logical sequence.

DISPLAY TEST

The main display proceeds through a series of colors (red, green, and blue), and a test pattern.

CABINET TESTS

The Cabinet tests provides diagnostics for the start button and shaker motor.

STAGE MECHANISM TESTING

A test to ensure that the stage mechanism servos are functioning.

Press the start button to move the stage through each of its position to confirm it is working properly.

COIL ADJUSTMENT SETTINGS

Coil settings allow you to control the “strength” of the various mechanisms on the playfield.

To access Houdini’s Coils settings

1. **Power on the machine.**
2. **Open the coin door.**
3. **Press the MENU SELECT button to access the service mode.**
4. **Press the red +/- button to select the Settings icon.**
5. **Press the MENU SELECT button to enter the Settings section.**
6. **Use the flipper buttons to page through the different settings to the Coils setting.**

7. **Press the green BACK EXIT button to return to the previous menu.**

HOUDINI COIL SETUP

This process needs to be performed each time Houdini is moved and or re-leveled. This process insures the correct pulse settings for the coils used in the catapult and supporting features. Failure to test and set these settings could result in poor game performance.

CAUTION! WHEN PERFORMING THESE CALIBRATIONS, THE PLAYFIELD WILL BE ACTIVE! TAKE CAUTION WHERE YOU PLACE YOUR HANDS.

To calibrate coils after moving or re-leveling Houdini

1. **Open the coin door and remove the playfield glass.**
2. **Pull out the interlock switch inside the coin door on the left side.**
3. **Put the game in test mode and select Utilities >Clear Houdini’s Balls and follow the onscreen directions.**
4. **Catch the balls as they are cleared.**
5. **Press the green BACK/EXIT button once to return to the main menu.**
6. **Select Settings >Coil Adjustment Settings.**

LOWER CATAPULT

Place a ball in the lower catapult, located on the left side of the playfield, and watch where the ball lands. When adjusted correctly the ball should pass through the opened trunk centered up and down between the base and lid of the trunk.

If the ball lands before the trunk or hits the lower part of the trunk:
Increase the number of the LOWER CATAPULT by one and repeat the process.

If the ball lands beyond the trunk or hits the trunk lid:

Decrease the number of the LOWER CATAPULT by one and repeat the process.

UPPER CATAPULT

Place a ball in the upper catapult located right below the trunk. Observe how hard the ball hits the wire ramp. When adjusted correctly the ball should just barely make it into the ramp.

If the ball does not make it to the ramp:
Increase the number of the UPPER CATAPULT by one and repeat the process.

If the ball hits the ramp to hard:
Decrease the number of the UPPER CATAPULT by one and repeat the process.

UPPER VUK

Place a ball in the VUK located to the left of the mini playfield monitor. Watch how fast the ball travels down the ramp. When adjusted correctly the ball should just make it over the apex of the ramp.

If the ball does not make it over the apex of the ramp:
Increase the number of the UPPER VUK by one and repeat the process.

If the ball travels down the ramp too fast:
Decrease the number of the UPPER VUK by one and repeat the process.

SCOOP

Place a ball in the SCOOP located on the right side of the playfield just above the shooter lane, watch how fast the ball exits the SCOOP. When adjusted correctly the ball should barely make it out of the SCOOP and travel down to the right flipper.

If the ball does not make it out of the SCOOP:
Increase the number of the SCOOP by one and repeat the process.

If the ball comes out of the SCOOP too fast:
Decrease the number of the SCOOP by one and repeat the process.

Table 3.4 Coil Adjustment Settings

Name	Description	Value (Range)
Auto Fire	Specifies the strength of the Auto Fire feature.	• Options: 1 to 15 • Increments: 1 • Default: 15
Knocker	Specifies the strength of the knocker.	• Options: 0 to 21 • Increments: 1 • Default: 15
Left Flipper	Specifies the strength of the left flipper.	• Options: 15 to 29 • Increments: 1 • Default: 22
Left Lock Release	Specifies how long the left lock release is held down. Adjust if it is not held down long enough to release the ball or it two balls are released.	• Options: 0 to 20 • Increments: 1 • Default: 5

Name	Description	Value (Range)
Left Pop	Specifies the strength of the left pop bumper.	• Options: 5 to 20 • Increments: 1 • Default: 12
Left Sling	Specifies the strength of the left sling.	• Options: 1 to 10 • Increments: 1 • Default: 4
Lower Catapult	Specifies the strength of the lower catapult.	• Options: 10 to 34 • Increments: 1 • Default: 25
Right Flipper	Specifies the strength of the right flipper.	• Options: 15 to 29 • Increments: 1 • Default: 22
Right Pop	Specifies the strength of the right pop bumper.	• Options: 5 to 20 • Increments: 1 • Default: 12
Right Sling	Specifies the strength of the right sling.	• Options: 1 to 10 • Increments: 1 • Default: 4
Scoop	Specifies the strength of the lower vertical up-kicker.	• Options: 5 to 34 • Increments: 1 • Default: 7
Top Pop	Specifies the strength of the top pop bumper	• Options: 5 to 20 • Increments: 1 • Default: 12
Trough Kicker	Specifies the strength of the trough kicker.	• Options: 1 to 15 • Increments: 1 • Default: 6
Trunk Diverter	Specifies the strength of the trunk diverter	• Options: 0 to 5 • Increments: 1 • Default: 3
Upper Catapult	Specifies the strength of the upper catapult	• Options: 15 to 29 • Increments: 1 • Default: 17
Upper VUK	Specifies the strength of the upper vertical up-kicker.	• Options: 1 to 15 • Increments: 1 • Default: 8

FEATURES ADJUSTMENT SETTINGS

Features settings address conditions that are specific to that game.

To access Houdini's Feature settings

1. **Power on the machine.**
2. **Open the coin door.**
3. **Press the MENU SELECT button to access the service mode.**
4. **Press the red +/- button to select the Settings icon.**

5 **Press the MENU SELECT button to enter the Settings section.**

6 **Use the flipper buttons to page through the different settings to the Features setting.**

7 **Press the green BACK EXIT button to return to the previous menu.**

Table 3.5 Features Adjustment Settings

Name	Description	Value (Range)
Bonus Multiplier Extra Ball Level	Specifies the level of bonus that an extra ball is awarded.	• Options: 5, 6, 7, 8, 9, Off • Default: 7
Escapes for Escape From Death	Specifies the number of escapes that need to be completed to light Escape From Death.	• Options: 1 to 5 • Increments: 1 • Default: 2 • **Note: Select 6 to disable**
FILM Lit at Start of Game	Enables the movie theater to be open and ready at the start of a game.	• Options: Off,1,2,3,On • Default: 2
Handcuff Escape Pops per Handcuff	The number of handcuffs multiplied by the number of pops per handcuff determines the level of difficulty. • Pops per handcuff represents how many pop bumper hits are required to move up a level. At each level, Houdini throws a pair of handcuffs/chains out from behind the display.	• Options: Off, 2, 3, 4, 5 • Default: 3
Handcuffs in Handcuff Escape	The number of handcuffs multiplied by the number of pops per handcuff determines the level of difficulty. • Handcuffs needed represents how many 'levels' are in the mode. At each level, Houdini throws a pair of handcuffs/chains out from behind the display.	• Options: 4, 5, 6, 7, 8 • Default: 6
Illusions for Houdini Letter	Specifies the number of illusions required to earn a Houdini letter.	• Options: 3 to 10 • Increments: 1 • Default: 10
Illusions for Second Houdini Letter	Specifies the number of illusions required to earn a second Houdini letter. **Note:** Provided to ease game complexity	• Options: 6, 7, 8, 9, 10, Off • Default: Off
Jail Escapes for Houdini Letter	Specifies the number of Jail Escape Hurry Ups required to earn a Houdini letter.	• Options: 2, 3, 4, 5 • Default: 5
Jail Escapes for Extra Ball	Specifies the number of Jail Escape Hurry Ups required to earn an extra ball.	• Options: Off, 2, 3, 4, 5 • Default: 3
Jail Escapes Order	Specifies the order of Jail Escape Hurry Ups.	• Options: Easy to Hard, Random • Default: Random

Name	Description	Value (Range)
Jail Escapes Difficulty	Specifies the level of difficulty required for Jail Escape Hurry Ups. For example: When set to easy, a ramp shot only needs to enter ramp and not hit the target to complete Jail Escape Hurry Up.	• Options: Easy, Hard • Default: Easy
King of Cards Throws Per Hand	Specifies the number of cards that the player can throw from each hand during the King of Cards mission.	• Options: 1 to 9 • Increments: 1 • Default: 5
King of Cards Timer	Specifies the duration in seconds for the King of Cards mission.	• Options: 0 to 64 • Increments: 5 • Default: 45
Limit High Score to 3 Characters	Specifies the number of characters displayed on the LCD screen for a high score or other awards. **Note: Recommended setting is "On", due to potential profanity entries for high score awards.**	• Options: On, Off • Default: Off
Magic Shop Awards	Determines if Magic Shop awards are given in a random or fixed order.	• Options: Random, Fixed • Default: Random
Magic Shop Extra Ball	Enables/disables the Magic Shop extra ball.	• Options: On, Off • Default: On
Magic Shop Visits for Houdini Letter	Determines how many visits to the magic shop it takes to earn a Houdini letter.	• Options: 3 to 8 • Increments: 1 • Default: 8
Magic Shop Visits for Second Houdini Letter	Determines if a second Houdini letter can be earned at the Magic Shop.	• Options: 6,7,8, Off • Default: Off
Magic Standup Magnets	Specifies the degree of magnet activity for the Magic Standup magnets.	• Options: Low, Medium, High • Default: Medium
Magic Standup Ball Save	Provides a brief ball save, only for the outlanes, in case magnets throw the ball directly out. It does not save balls that drain between the flippers.	• Options: On, Off • Default: On
Missions Completed For Houdini Letter	Specifies the number of completed missions required to earn a Houdini letter.	• Options: 2, 3, 4, 5 • Default: 5
Missions Completed For Light EB	Specifies the number of completed missions required to earn an extra ball.	• Options: Off, 2, 3, 4, 5 • Default: 3
Movie Order*	Specifies the order that movies are played on the LCD display.	• Options: Fixed, Random • Default: Random
Movies Started For Houdini Letter	Determines how many movies/Jail Escape Hurry Ups must be started/completed to earn a Houdini letter.	• Options: 2, 3, 4, 5 • Default: 5
Movies Started For Light Extra Ball	Determines how many movies/Jail Escape Hurry Ups must be started/completed to light the extra ball.	• Options: 0ff, 2, 3, 4, 5 • Default: 3
Magic Standup Magnets	Specifies the degree of difficulty for the Magic Standup magnets.	• Options: Easy to Hard, Random • Default: Random
Seance Jackpots for Houdini Letter	Specifies the number of Seance Jackpot Multi-balls that must be completed to earn a Houdini letter.	• Options: 1, 2, 3, 4, 5, Super • Default: 2

Name	Description	Value (Range)
Missions Completed For Houdini Letter	Specifies the number of completed missions required to earn a Houdini letter.	• Options: Off, 2, 3, 4, 5 • Default: 5
Missions Completed For Light Extra Ball	Specifies the number of completed missions required to earn an extra ball.	• Options: Off, 2, 3, 4, 5 • Default: 3
Movie Order*	Specifies the order that movies are played on the LCD screen	• Options: Fixed, Random • Default: Random
Movie Voice	Specifies the gender used for the voice used during movies.	• Options: Female, Male, Random • Default: Male
Movies Started For Houdini Letter	Determines how many movies/Jail Escape Hurry Ups must be started to earn a Houdini letter. **Note: Houdini letter is awarded at the completion of the mode.**	• Options: 2, 3, 4, 5 • Default: 5
Movies Started For Light Extra Ball	Determines how many movies/Jail Escape Hurry Ups must be started to light the extra ball. **Note: Extra ball is lit at the completion of the mode.**	• Options: Off, 2, 3, 4, 5 • Default: 3
Scoop Ball Save	Provides a brief ball save when ball ejects from the scoop, when not in multi-ball.	• Options: On, Off • Default: On
Seance Ball Save	Provides a brief ball save during Seance Multi-ball.	• Options: 1 to 31 • Increments: 1 • Default: 18
Seance Jackpots for Houdini Letter	Specifies how many Seance Jackpots are needed to earn a Houdini letter.	• Options: 1, 2, 3, 4, 5, Super • Default: 2
Seance Jackpots for Return from Beyond	Specifies the number of Seance Jackpot Multi-balls that must be completed to light the Return From Beyond Mode.	• Options: 1, 2, 3, 4, 5, Super • Default: 2
Show Game Time in Last Scores	Displays the game time duration of the previous played game.	• Options: On, Off • Default: On
Spins to Free Haldane	Specifies the number of spins required to enable Haldane movie mode.	• Options: 15 to 119 Increments: 5 • Default: 60 • **Note: Select 6 to disable**
Stage Difficulty	Specifies the level of difficulty required to open the stage (e.g. impacts the number of shots at the stage, or key target needed, before the stage opens).	• Options: Easy, Normal, Hard • Default: Normal
Stage Front Eject	Enables the feature to allow the ball to be ejected back out from the stage.	• Options: Enabled, Disabled • Default: Disabled
Timer for Movie Modes	Specifies the length of time to complete each movie mode.	• Options: 30 to 64 • Increments: 5 • Default: 45
Timer for Stage Modes	Specifies the length of time to complete each stage mode.	• Options: 30 to 64 • Increments: 5 • Default: 45

Name	Description	Value (Range)
Tournament Mode	Specifies the conditions to prepare a game for tournament play. Disable all extra balls, removes randomness of Magic Shop awards, Jail Escape Hurry Ups, and movies.	• Options: On, Off • Default: Off
Trunk Multiball Lock Starts Lit	• When enabled, each player starts with the lock shot lit. • When disabled, each player must first light the lock shot.	• Options: On, Off • Default: On
Trunk Multiball Jackpots for Houdini Letter	Specifies the number of Trunk Multi-ball jackpots that must be completed to earn a Houdini letter.	• Options: 1, 2, 3, 4, 5, Super • Default: 3
Trunk Multiball Save	Provides a brief ball save during Trunk Multi-ball	• Options: 1 to 31 • Increments: 1 • Default: 20
Visits to the Magic Shop for Houdini Letter	Specifies the number of visits to the Magic Shop required to earn a Houdini letter.	• Options: 1 to 9 • Increments: 1 • Default: 4
Visits to the Magic Shop for Second Houdini Letter	Specifies the number of visits to the Magic Shop required to earn a second Houdini letter.	• Options: 5 to 9 • Increments: 1 • Default: 8

PRICING ADJUSTMENT SETTINGS

Pricing adjustment settings address settings related to game unit value, free play, and currency management.

Pricing establishes the game's unit of value, which should be the lowest denomination of currency based on coin door configuration.

To access Houdini's Pricing settings

1. **Power on the machine.**
2. **Open the coin door.**
3. **Press the MENU SELECT button to access the service mode.**
4. **Press the red +/- button to select the Settings icon.**
5. **Press the MENU SELECT button to enter the Settings section.**
6. **Use the flipper buttons to page through the different settings to the Pricing setting.**

7. **Press the green BACK EXIT button to return to the previous menu.**

Table 3.6 Price Table

Desired Coinage	Set “Pricing Plan’
25 cents per game	1 unit = 1 credit
25 cents per game	1 unit for 1 credit, 2 for 3
50 cents per game	2 units for 1 credit
50 cents per game or 3 games per dollar	2 units for 1 credit, 4 for 3
50 cents per game or 5 games for 2 dollars	2 units for 1 credit, 8 for 5
75 cents per game or 3 games for 2 dollars	3 units for 1 credit, 8 for 3
75 cents per game	3 units for 1 credit
1 dollar per game **(Default setting)**	4 units for 1 credit
1 dollar per game or 3 games for 2 dollars	4 units for 1 credit, 8 for 3
1 swipe per game	1 swipe for 1 credit

Table 3.7 Pricing Adjustment Settings

Name	Description	Value (Range)
Bill Validator	Set number of units to a single pulse from the validator is worth. Determines how many units to credit based on pulses.	• Options: 1 to 19 • Increments: 1 • Default: 1
Coin Slot 1 Units	Specifies how many units are credited in Coin Slot 1 when a coin is inserted.	• Options: 1 to 20 • Increments: 1 • Default: 1
Coin Slot 2 Units	Specifies how many units are credited in Coin Slot 2 when a coin is inserted.	• Options: 1 to 20 • Increments: 1 • Default: 1
Coin Slot 4 Units	Specifies how many units are credited in Coin Slot 4 when a coin is inserted.	• Options: 1 to 20 • Increments: 1 • Default: 1
Coin Slot 5 Units	Specifies how many units are credited in Coin Slot 5 when a coin is inserted.	• Options: 1 to 20 • Increments: 1 • Default: 1
Coin Slot 6 Units	Specifies how many units are credited in Coin Slot 6 when a coin is inserted.	• Options: 1 to 20 • Increments: 1 • Default: 1
Credits	Specifies the number of credits currently on the machine. This can be adjusted, as needed.	• Options: 0 to 98 • Increments: 1 • Default: 0
Currency	Specifies the currency accepted for game play.	• Options: Dollar, Euro, Pound, Kroner • Default: Dollar
Free Play	Enables/disables free play.	• Options: On, Off • Default: Off

Name	Description	Value (Range)
Max Service Credits	The highest number of credits that can be added to the machine.	• Options: 0 to 98 • Increments: 1 • Default: 30
Pricing Plan	Specifies the number of units (see Unit Value) for 1 credit of play.	• Options: • 1 unit = 1 credit • 1 unit for 1 credit, 2 for 3 • 2 units for 1 credit • 2 units for 1 credit, 4 for 3 • 2 units for 1 credit, 8 for 5 • 3 units for 1 credit, 8 for 3 • 3 units for 1 credit • 4 units for 1 credit • 4 units for 1 credit, 8 for 3 • 1 swipe for 1 credit • Default: 4 units for 1 credit
Unit Value	Specifies the amount in U.S. currency required to play a game. **Note: This applies to the lowest denomination that Houdini accepts.**	• Options:..1,.2,.25,.5, 1 • Default: .25

REPLAY ADJUSTMENT SETTINGS

To access Houdini's Replay settings

1. **Power on the machine.**
2. **Open the coin door.**
3. **Press the MENU SELECT button to access the service mode.**
4. **Press the red +/- button to select the Settings icon.**
5. **Press the MENU SELECT button to enter the Settings section.**
6. **Use the flipper buttons to page through the different settings to the Replay setting.**

7. **Press the green BACK EXIT button to return to the previous menu.**

Table 3.8 Replay Adjustment Settings

Name	Description	Value (Range)
Replay Award Level 1	Specifies the point total required to receive an award that is defined in Replay Award Type.	• Options:50000,5000000 • Increments: 10000 • Default: 500000

Name	Description	Value (Range)
Replay Award Level 2	Specifies the point total required to receive an award that is defined in Replay Award Type.	• Options:50000,5000000 • Increments: 10000 • Default: 750000
Replay Award Level 3	Specifies the point total required to receive an award that is defined in Replay Award Type.	• Options:50000,5000000 • Increments: 10000 • Default: 1000000
Replay Award Level 4	Specifies the point total required to receive an award that is defined in Replay Award Type.	• Options:50000,5000000 • Increments: 10000 • Default: 1500000
Replay Award Type	Specifies the type of reward given to the player based upon a defined accomplishment (refer to Replay Award Level settings).	• Options: Free Game, Extra Ball, Points, Off • Default: Extra Ball
Replay Boost	Specifies the amount of points that each replay value will be increased. After each game in which a replay is earned, all replay levels are increased by the defined replay boost amount. For any game in which a replay was not won, the amount is reduced by the boost amount. For example, if three games in a row earn a replay, each replay amount is set to the original value + (3 * boost value). If on the next game the replay is not earned, it drops to original value + (2 * boost value).	• Options:10000, 1000000 • Increments: 5000 • Default: 50000
Replay Levels	Specifies how many replay levels are active	• Options: 1, 4 • Increments: 1 • Default: 1
Replay Percentage	Specifies the percentage of games that award the player a replay if using Replay Type.	• Options: 0 to 50 • Increments: 1 • Default: 5
Replay Type	Specifies the type of replay awarded to the player.	• Options: Fixed, Boost, • Default: Fixed

SOUND ADJUSTMENT SETTINGS

Sound settings allow you to control the level of verbiage on the game. In a home setting you may want to initially have all callouts enabled. However, you may find, with time, that the game is too verbose. The Sound adjustment settings allow you to enable or disable these narrations.

To access Houdini's Sound settings

1. **Power on the machine.**
2. **Open the coin door.**
3. **Press the MENU SELECT button to access the service mode.**
4. **Press the red +/- button to select the Settings icon.**
5. **Press the MENU SELECT button to enter the Settings section.**
6. **Use the flipper buttons to page through the different settings to the Sound setting.**

7 **Press the green BACK EXIT button to return to the previous menu.**

Table 3.9 Sound Adjustment Settings

Name	Description	Value (Range)
Announce Next Shot	Specifies whether the narrator describes the next shot, after the current shot is successfully made during a stage or movie mode.	• Options: On, Off • Default: On
Halt Voice on Flip Escape	Specifies if current announcements (intro and/or rules), when both flippers are pressed is enabled. If set to Off, the mode starts and ball put in play, however the audio intros continue to play.	• Options: On, Off • Default: On
Initial Volume	Specifies Houdini's volume when powering on the machine.	• Options: 0 to 10 • Increments: 1 • Default: 5
Movie Intros	Specifies whether the narrator describes the movie.	• Options: On, Off • Default: On
Movie Open Announce	Specifies whether the narrator announces that the movie theatre is open.	• Options: On, Off • Default: On
Movie Shot Rules	Specifies whether the narrator explains the shot sequence requirements before the mode begins	• Options: On, Off • Default: On
Slingshot	Allows the selection of the sling shot sound effect.	• Options: Giggle, Kicker, Off • Default: Giggle
Stage Houdini Intros	Specifies whether Houdini describes the trick he is about to perform.	• Options: On, Off • Default: On
Stage Next Act Announce	Determines if there is an announcement of the next act when the stage opens.	• Options: On, Off • Default: On
Stage Open Announce	Determines if there is an announcement when the stage opens.	• Options: On, Off • Default: Off
Stage Re-announce Open	Specifies whether the narrator re-announces what illusion/escape is ready at the stage. For example, after a non-stage mode completes (e.g. multi-ball or movie mode), if the stage is open, the narrator makes the announcement.	• Options: On, Off • Default: Off
Stage Shot Rules	Specifies whether the narrator describes the sequence of shots required to complete the illusion/escape.	• Options: On, Off • Default: On

STANDARD ADJUSTMENT SETTINGS

Standard adjustments address global options, such as the number of balls per game, tilt settings, and replay award settings.

To access Houdini's Standard Adjustments settings

1. **Power on the machine.**
2. **Open the coin door.**
3. **Press the MENU SELECT button to access the service mode.**
4. **Press the red +/- button to select the Settings icon.**
5. **Press the MENU SELECT button to enter the Settings section.**
6. **Use the flipper buttons to page through the different settings to the Standard setting.**

7. **Press the green BACK EXIT button to return to the previous menu.**

Table 3.10 Standard Adjustment Settings

Name	Description	Value (Range)
Attract Mode Music	Enables/disables Houdini's "Attract Mode" music. **Note: Attract Mode is a synchronized display of sounds and music that occurs when the machine is not currently being played.**	• Options: On, Off • Default: Off
Attract Mode Sounds	Enables/disables Houdini's "Attract Mode" sounds. If set to On, Attract Mode provides Houdini quotes with voice callouts. **Note: Attract Mode is a synchronized display of sounds and music that occurs when the machine is not currently being played.**	• Options: On, Off • Default: Off
Ball Saver Timer	Specifies the duration in seconds that the game provides a ball save should the ball drain.	• Options: 0 to 60 • Increments: 2 • Default: 12
Balls Per Game	Specifies the number of balls available to the player during a single game.	• Options: 1 to 5 • Increments: 1 • Default: 3
Clear Shooter Lane After 60 Seconds	If the ball is left in the shooter lane for 60 seconds the ball auto-plunges. This prevents a game that has been abandoned from continuing in the middle of a game.	• Options: On, Off • Default: Off
Custom Message	Allows you to insert a custom message on the LCD display.	• Options: On, Off • Default: Off
Flipper Hold Boost	Provides extra power to the flippers when held. Also adds a buzz to the flipper. The setting is sometimes needed in a low voltage environment.	• Options: On, Off • Default: True

Name	Description	Value (Range)
Knocker	Specifies the type of knocker to use: soft, loud, mechanical (if installed), or off for no knocker sounds	• Options: Off, Audio High Volume, Audio Low Volume, Mechanical • Default: Audio High Volume
Match Award	Enables the match award.	• Options: Credit, Off • Default: Credit
Match Feature	Enables the match feature.	• Options: On, Off • Default: On
Match Percentage	Determines how frequently the player will match.	• Options: 0 to 50 • Increments: 1 • Default: 5
Max Number of Extra Balls	The maximum number of extra balls that can be configured for Houdini	• Options: 0 to 9 • Increments: 1 • Default: 4
Shaker Motor	Enables/disables the use of a shaker motor. **Note: A shaker motor is not included with Houdini.**	• Options: On, Off • Default: Off
Shaker Usage	Specifies the frequency that the shaker is invoked.	• Options: Low, Medium, Heavy • Default: Medium
Tilt Bob Settle Time	Determines how much time passes after a tilt warning before the system responds to another tilt bob trigger.	• Options: 0 to 7 • Increments: 1 • Default: 3
Tilt Warnings	Specifies the number of times the player is warned due to a plumb bob switch activation.	• Options: 0 to 8 • Increments: 1 • Default: 2

PRESETS

The Presets feature allows you load a profile of settings. There are seven presets available. In addition, from the Preset menu, you can save your current settings and re-load them.

Note: Presets are subject to change. Refer to American Pinball's Support page for the most current listing of Presets.

To access Houdini's Presets

1. **Power on the machine.**
2. **Open the coin door.**
3. **Press the MENU SELECT button to access the service mode.**
4. **Press the red +/- button to select the Settings icon.**
5. **Press the MENU SELECT button to enter the Settings section.**
6. **Use the flipper buttons to page through the different settings to the Presets setting.**

7 **Press the green BACK EXIT button to return to the previous menu.**

Table 3.11 Preset Settings table

Name	Default Setting	Extra Easy	Easy	Medium	Hard	Extra Hard
Bonus Multiplier Extra Ball Level	7	6	6	7	9	Off
Escapes for Escape Death	2	1	2	2	3	4
FILM Lit at Start of Game	2	On	3	2	1	Off
Handcuff Escape Pops per Handcuff	3	2	3	3	4	5
Handcuffs in Handcuff Escape	6	5	5	6	6	6
Illusions for Houdini Letter	10	4	7	10	10	10
Illusions for Second Houdini Letter	Off	6	8	Off	Off	Off
Jail Escapes Difficulty	Easy	Easy	Easy	Easy	Hard	Hard
Jail Escapes for Extra Ball	3	2	2	3	4	Off
Jail Escapes for Houdini Letter	5	3	4	5	5	5
King of Cards Throws Per Hand	5	7	6	5	4	4
King of Cards Timer (in seconds)	45	60	55	50	45	40
Magic Shop Extra Ball	On	On	On	On	Off	Off
Magic Shop Visits for Houdini Letter	8	3	5	8	8	8
Magic Shop Visits for Second Houdini Letter	Off	6	7	Off	Off	Off
Magic Standup Ballsave	On	On	On	On	Off	Off
Missions Completed For Houdini Letter	5	2	3	5	5	5
Missions Completed For Light EB	3	2	2	23	4	Off
Movies Started For Houdini Letter	5	3	4	5	5	5
Movies Started For Light Extra Ball	3	2	2	3	4	Off
Scoop Ballsave	On	On	On	On	On	On
Seance Ball Save (in seconds)	18	30	25	18	10	0
Seance Jackpots for Houdini Letter	2	1	2	2	3	4
Seance Jackpots for Return from Beyond	2	1	1	2	3	4
Spins to Free Haldane	60	30	45	60	70	80
Stage Difficulty	Normal	Easy	Easy	Normal	Normal	Hard
Timer for Movie Modes (in seconds)	45	60	55	45	40	35

Name	Default Setting	Extra Easy	Easy	Medium	Hard	Extra Hard
Timer for Stage Modes (in seconds)	45	60	55	45	40	35
Trunk MB Lock starts Lit	On	On	On	On	Off	Off
Trunk Multiball Ball Save	20	30	25	20	10	0
Trunk Multiball Jackpots for Houdini Letter	3	1	2	3	4	Super

STATISTICS

To access Houdini's Statistics menu

1. **Power on the machine.**
2. **Open the coin door.**
3. **Press the MENU SELECT button to access the service mode.**
4. **Press the red +/- button to select the Statistics icon.**
5. **Press the MENU SELECT button to enter the Statistics section.**
6. **Use the flipper buttons to page through the different settings to the Pricing setting.**

7. **Press the green BACK EXIT button to return to the previous menu.**

Table 3.12 Game Statistics

Screen	Audit Name	Description
Earnings Statistics	**Average Ball Time**	The average time a ball is in play.
	Total Balls Played	The total number of balls played.
Basic Statistics	**Average Game Time**	The average game time.
Earnings Statistics	**Total Extra Balls**	The total number or earned extra balls.

Screen	Audit Name	Description
Basic Statistics	**Total Extra Balls**	The total number of earned extra balls.
	Total Games Played	The total number of games played.
	1 Player Games	The total number of 1 player games.
	2 Player Games	The total number of 2 player games.
	3 Player Games	The total number of 3 player games.
	4 Player Games	The total number of 4 player games.
Features Statistics	**Escapes Completed**	The total number of Jail Escape Hurry Ups completed.
	Escapes Started	The total number of Jail Escape Hurry Ups started.
	Seance Multiballs	The total number of Seance multi-balls.
Standard Statistics	**Left Drains**	The total number of left drains.
	Right Drains	The total number of right drains.
	Total Drains	The total number of drains.
	Total Extra Balls	The total number of extra balls earned.
	Tilts	The total number of tilts.
Feature Statistics	**Catapult Success**	The total number of times the catapult is successfully completed.
	Catapult Failures	The total number of times the catapult fails to complete.
	FILM Modes Started	The total number of times a Film mode has started.
Game Time Statistics	**Game Time 0 to 1**	The total number of game times that last between 0 and 1 minute.
	Game Time 1 to 2	The total number of game times that last between 1 and 2 minutes.
	Game Time 2 to 3	The total number of game times that last between 2 and 3 minutes.
	Game Time 3 to 4	The total number of game times that last between 3 and 4minutes.
	Game Time 4 to 5	The total number of game times that last between 4 and 5 minutes.
	Game Time 5 to 6	The total number of game times that last between 5 and 6 minutes.
	Game Time 6 to 8	The total number of game times that last between 6 and 8 minutes.
	Game Time 8 to 10	The total number of game times that last between 8 and 10 minutes.
	Game Time 10 to 15	The total number of game times that last between 10 and 15 minutes.
	Game Time Over 15	The total number of game times that lasts over 15 minutes.

Screen	Audit Name	Description
Score Breakdown Statistics	**Score 0 to 10K**	Total number of games with scores between 0 and 10k.
	Score 10K to 25K	Total number of games with scores between 10k and 25k.
	Score 25K to 50K	Total number of games with scores between 25k and 50k.
	Score 50K to 100K	Total number of games with scores between 50k and 100k.
	Score 100K to 250K	Total number of games with scores between 100k and 250k.
	Score 250K to 500K	Total number of games with scores between 250k and 500k.
	Score 500K to 1M	Total number of games with scores between 500k and 1 million.
	Score 1M to 5M	Total number of games with scores between 1 million and 5 million.
	Score over 5M	Total number of games with scores over 5 million.
Features Statistics	**Catapult Accuracy**	Accuracy of the catapult shot, based on hits and misses.
	Missions Completed	The total number of missions completed.
	Average Missions Completed	The average number of missions completed.

UTILITIES

To access Houdini's Utilities menu

1. **Power on the machine.**
2. **Open the coin door.**
3. **Press the MENU SELECT button to access the service mode.**
4. **Press the red +/- button to select the Utilities icon.**
5. **Press the MENU SELECT button to enter the Utilities section.**
6. **Use the flipper buttons to page through the different settings to the Pricing setting.**

7. **Press the green BACK EXIT button to return to the previous menu.**

Table 3.13 Utilities

Utility Name	Description
Clear Houdini's Balls	Ejects the ball from subway and trough.
Clear Statistics	The current statistics will be moved to 'previous period' and all values will be set back to 0. **Note:** This does not impact all time statistics.
Set Date and Time	Set the date and time to be stored on the machine.
Restore Default Settings	Restore settings to factory default.
Stage Calibration	insures the state is properly configured. Follow on screen instructions, which indicates to put a ball on the stage, and then hit the start button. Calibration takes approximately 15 seconds. **Note:** The stage is calibrated before it leaves the factory. However, it may need to be re-calibrated if restored to default settings.

Houdini Stage - Captive Ball Calibration: https://youtu.be/-7ML7Cgl7no

Houdini Stage - Curtain Testing & Calibration: https://youtu.be/DUw2fac7srk

DEDICATED SWITCH LOCATIONS

Table 4.1 Dedicated Switch Table

DEDICATED SWITCH LOCATIONS																
Board 0 Bank A	Return 1		Return 2		Return 3		Return 4		Return 5		Return 6		Return 7		Return 8	
Ground	BLK S/U	GRY 0	BLK S/U	BRN 1	BLK S/U	RED 2	BLK S/U	ORG 3	BLK S/U	YEL 4	BLK S/U	GRN 5	BLK Micro	BLU 6	BLK	VIO 7
BLK	(E)scape		e(S)cape		es(C)ape		esc(A)pe		esca(P)e		escap(E)		Left Orbit		Right Orbit	
Board 0 Bank B	Return 1		Return 2		Return 3		Return 4		Return 5		Return 6		Return 7		Return 8	
Ground	BRN Micro	BLK 8	BRN Micro	GRY 9	BRN S/U	RED 10	BRN Leaf	ORG 11	BRN Micro	YEL 12	BRN Micro	GRN 13	BRN	BLU 14	BRN Micro	VIO 15
BLK	Lower Catapult		Milk can		Left Magic Standup		Left Slingshot		Left Inlane		Left Outlane		Not Used		Upper Catapult	
Board 1 Bank A	Return 1		Return 2		Return 3		Return 4		Return 5		Return 6		Return 7		Return 8	
Ground	RED Opto	BLK 16	RED Opto	BRN 17	RED Opto	GRY 18	RED Opto	ORG 19	RED Micro	YEL 20	RED Micro	GRN 21	RED Micro	BLU 22	RED Micro	VIO 23
BLK	Plastic Ramp Entrance		Wire Ramp Exit		Stage Back		STAGE		Upper 3 Ball Release #1		Upper 3 Ball Release #2		Upper 3 Ball Release #3		Upper Outer Orbit	
Board 1 Bank B	Return 1		Return 2		Return 3		Return 4		Return 5		Return 6		Return 7		Return 8	
Ground	ORG	BLK 24	ORG Micro	BRN 25	ORG S/U	RED 26	ORG Leaf	GRY 27	ORG Leaf	YEL 28	ORG Leaf	GRN 29	ORG Micro	BLU 30	ORG Micro	VIO 31
BLK	Not Used		Upper VUK		Key Standup		Top Pop Bumper		Right Pop Bumper		Left Pop Bumper		Stage Alley		Key Lane	
DEDICATED SWITCH LOCATIONS																
CONTINUED ON NEXT PAGE																

DEDICATED SWITCH LOCATIONS

Board 2 Bank A	Return 1	Return 2	Return 3	Return 4	Return 5	Return 6	Return 7	Return 8
	YEL Opto / BLK 32	YEL Opto / BRN 33	YEL Opto / RED 34	YEL Opto / ORG 35	YEL Opto / GRY 36	YEL Opto / GRN 37	YEL Opto / BLU 38	YEL Opto / VIO 39
BLK	Right Lock #1	Right Lock #2	Right Lock #3	Magic Shop	Front of Stage	Stage Exit	Trunk	Trunk Lid
Board 2 Bank B	Return 1	Return 2	Return 3	Return 4	Return 5	Return 6	Return 7	Return 8
Ground	GRN S/U / BLK 40	GRN S/U / BRN 41	GRN S/U / RED 42	GRN S/U / ORG 43	GRN S/U / YEL 44	GRN S/U / GRY 45	GRN Micro / BLU 46	GRN Micro / VIO 47
BLK	(S)eance	s(E)ance	se(A)nce	sea(N)ce	sean(C)e	seanc(E)	Right Inner Loop	Upper Inner Loop
Board 3 Bank A	Return 1	Return 2	Return 3	Return 4	Return 5	Return 6	Return 7	Return 8
Ground	BLU Micro / BLK 48	BLU Micro / BRN 49	BLU Micro / RED 50	BLU Micro / ORG 51	BLU Micro / YEL 52	BLU Micro / GRN 53	BLU Micro / GRY 54	BLU Micro / VIO 55
BLK	Ball Trough #1	Ball Trough #2	Ball Trough #3	Ball Trough #4	Ball Trough #5	Ball Trough #6	Ball Trough Stack	Not Used
Board 3 Bank B	Return 1	Return 2	Return 3	Return 4	Return 5	Return 6	Return 7	Return 8
Ground	VIO Micro / BLK 56	VIO Micro / BRN 57	VIO Leaf / RED 58	VIO Micro / ORG 59	VIO Leaf / YEL 60	VIO S/U / GRN 61	VIO Micro / BLU 62	VIO Micro / GRY 63
BLK	Shooter Lane	Right Outlane	Not Used	Right Inlane	Right Slingshot	Lower Right Magic Standup	Scoop	Spinner
Board 4 Bank A	Return 1	Return 2	Return 3	Return 4	Return 5	Return 6	Return 7	Return 8
Ground	WHT Leaf / BLK 64	WHT Leaf / BRN 65	WHT Micro / RED 66	WHT Push / ORG 67	WHT Push / YEL 68	WHT Push / GRN 69	WHT Push / BLU 70	WHT N/A / VIO 71
BLK	Left Flipper Button	Right Flipper Button	Start Button	Enter	Exit	Down	Up	Tilt
Board 4 Bank B	Return 1	Return 2	Return 3	Return 4	Return 5	Return 6	Return 7	Return 5
Ground	GRY N/A / BLK 72	GRY Push / BRN 73	GRY Micro / RED 74	GRY Micro / ORG 75	GRY Opto / YEL 76	GRY Opto / GRN 77	GRY Leaf / BLU 78	GRY Open / WHT 79
BLK	Not Used	Not Used	Coin #1	Coin #2	DBA	Not Used	Not Used	Not Used

Note: Coil drivers are IRL540N type.

PLAYFIELD SWITCH MAP

Figure 4.1 Playfield Switch Map

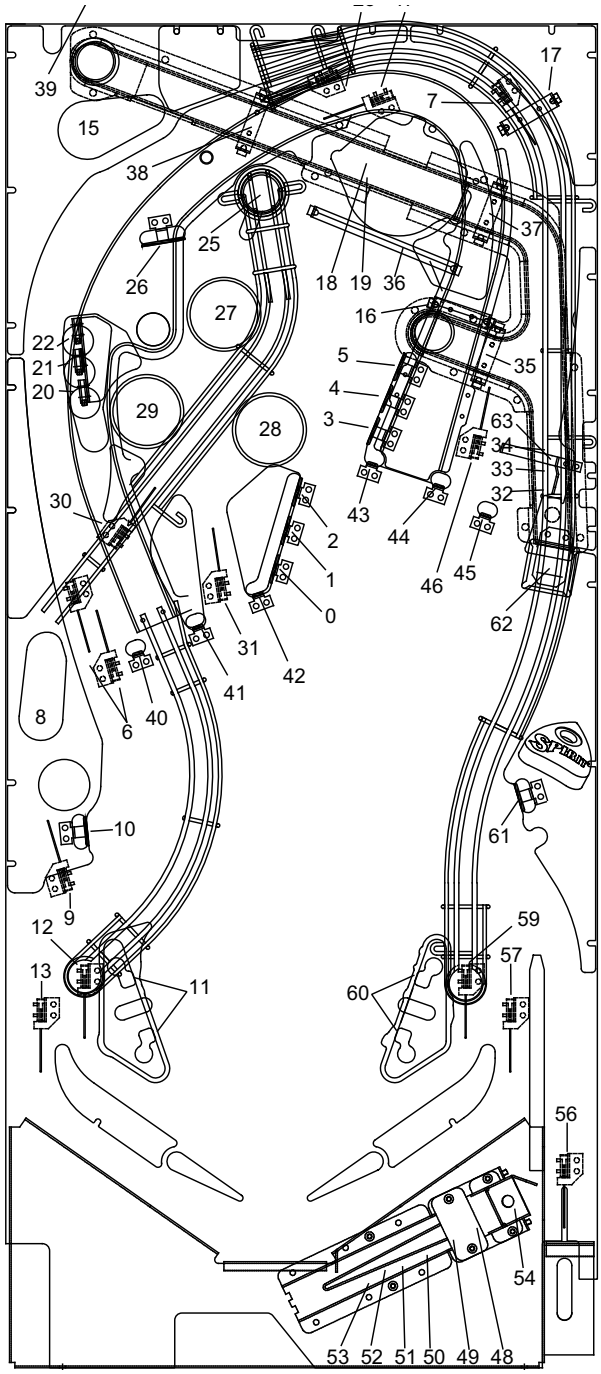

PLAYFIELD SWITCH MAP

0 - (E)scape
1 - e(S)cape
2 - es(C)ape
3 - esc(A)pe
4 - esca(P)e
5 - escap(E)
6 - LEFT ORBIT
7 - RIGHT ORBIT
8 - LOWER CATAPULT
9 - MILK CAN
10 - LEFT MAGIC STANDUP
11 - LEFT SLINGSHOT
12 - LEFT INLANE
13 - LEFT OUTLANE
14 - NOT USED
15 - UPPER CATAPULT
16 - PLASTIC RAMP ENTERANCE
17 - WIRE RAMP EXIT
18 - STAGE BACK
19 - STAGE
20 - UPPER 3 BALL #1
21 - UPPER 3 BALL #2
22 - UPPER 3 BALL #3
23 - UPPER OUTER ORBIT
24 - NOT USED
25 - UPPER V.U.K.
26 - KET STANDUP
27 - TOP POP BUMPER
28 - RIGHT POP BUMPER
29 - LEFT POP BUMPER
30 - STAGE ALLEY
31 - KEY LANE
32 - RIGHT LOCK #1
33 - RIGHT LOCK #2
34 - RIGHT LOCK #3
35 - MAGIC SHOP
36 - FRONT OF STAGE
37 - STAGE EXIT
38 - TRUNK
39 - TRUNK LID
40 - (S)eance
41 - s(E)ance
42 - se(A)nce
43 - sea(N)ce
44 - sean(C)e
45 - seanc(E)
46 - RIGHT INNER LOOP
47 - UPPER INNER LOOP
48 - BALL TROUGH #1
49 - BALL TROUGH #2
50 - BALL TROUGH #3
51 - BALL TROUGH #4
52 - BALL TROUGH #5
53 - BALL TROUGH #6
54 - BALL TROUGH STACK
55 - NOT USED
56 - SHOOTER LANE
57 - RIGHT OUTLANE
58 - NOT USED
59 - RIGHT INLANE
60 - RIGHT SLINGSHOT
61 - LOWER RIGHT MAGIC STANDUP
62 - SCOOP
63 - SPINNER
64 - LEFT FLIPPER BUTTON
65 - RIGHT FLIPPER BUTTON
66 - START BUTTON
67 - ENTER
68 - EXIT
69 - DOWN
70 - UP
71 - TILT
72 - NOT USED
73 - NOT USED
74 - COIN #1
75 - COIN #2
76 - DBA
77 - NOT USED
78 - NOT USED
79 - NOT USED

COIL LOCATIONS

Table 5.1 Coil Locations Table

COIL LOCATIONS								
	Drive 1	Drive 2	Drive 3	Drive 4	Drive 5	Drive 6	Drive 7	Drive 8
	BRN BLK	BRN GRY	BRN RED	BRN ORG	BRN YEL	BRN GRN	BRN BLU	BRN VIO
48V Power	Pin #1	Pin #3	Pin #4	Pin #5	Pin #6	Pin #7	Pin #8	Pin #9
BRN	Auto Launch	Trough up Kicker	Lower Catapult	Right Flipper Power	Right Flipper Hold	Left Flipper Power	Left Flipper Hold	Left Slingshot
	Drive 9	Drive 10	Drive 11	Drive 12	Drive 13	Drive 14	Drive 15	Drive 16
	RED BLK	RED BRN	RED GRY	RED ORG	RED YEL	RED GRN	RED BLU	RED VIO
48v Power	Pin #1	Pin #2	Pin #4	Pin #5	Pin #6	Pin #7	Pin #8	Pin #9
RED	Upper 3 Ball Lock Downpost	Left Bumper	Right Bumper	Center Bumper	Up Post Diverter	Upper Catapult	Trun k Release	
	Drive 17	Drive 18	Drive 19	Drive 20	Drive 21	Drive 22	Drive 23	Drive 24
	BLU BLK	BLU BRN	BLU RED	BLU ORG	BLU YEL	BLU GRN	BLU GRY	BLU VIO
48V Power	Pin #1	Pin #2	Pin #4	Pin #5	Pin #6	Pin #7	Pin #8	Pin #9
BLU	Trunk Diverter	Upper VUK	3 Ball Release Undertrough	Sc oop	Left Magnet	Right Magnet	Center Magnet	Right Slingshot
	Drive 25	Drive 26	Drive 27	Drive 28	Drive 29	Drive 30	Drive 31	Drive 32
	BLK GRY	BLK BRN	BLK RED	BLK ORG	BLK YEL	BLK GRN	BLK BLU	BLK VIO
12V Power	Pin #1	Pin #3	Pin #4	Pin #5	Pin #6	Pin #7	Pin #8	Pin #9
YEL	General Illumination	Spolight Lower Left	Not Used	Backpanel LED Strip	Not Used	Spotlight Lower Right	Spotlight Upper Right	Spotlight Upper Left

PLAYFIELD COIL MAP

Figure 5.1 Playfield Coil Map

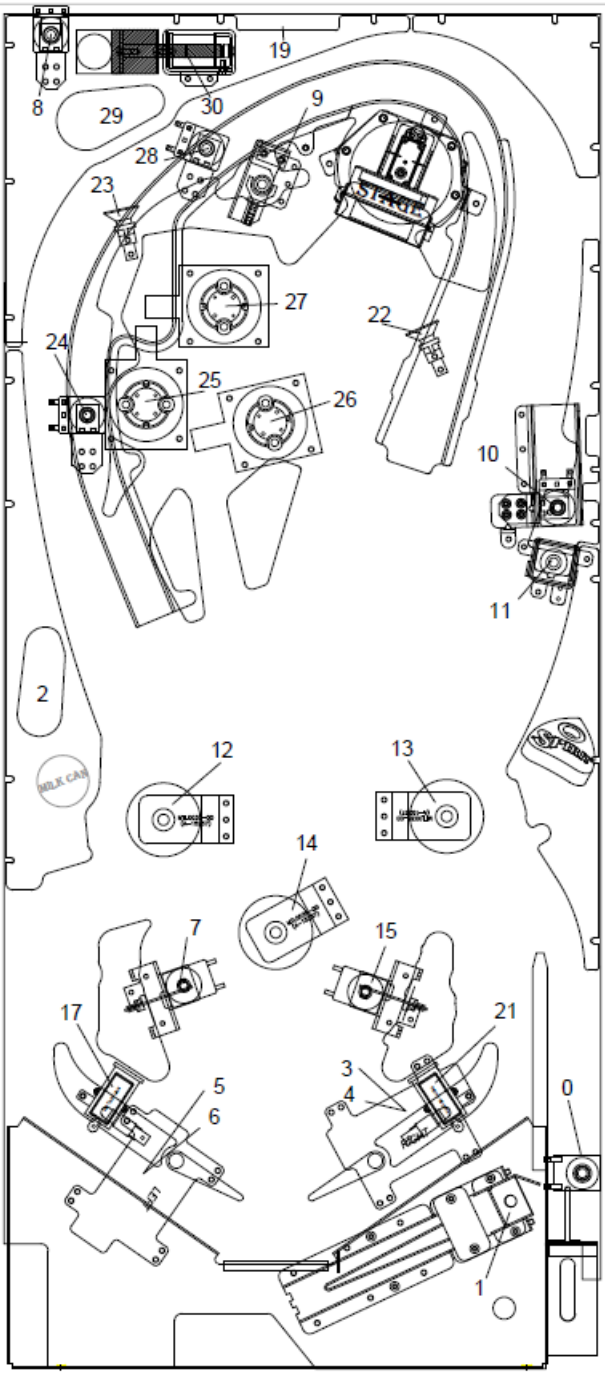

PLAYFIELD COIL MAP

0 - AUTO LAUNCH
1 - TROUGH UP KICKER
2 - LOWER CATAPULT
3 - RIGHT FLIPPER POWER
4 - RIGHT FLIPPER HOLD
5 - LEFT FLIPPER POWER
6 - LEFT FLIPPER HOLD
7 - LEFT SLING SHOT
8 - TRUNK DIVERTER
9 - UPPER VUK
10 - 3 BALL RELEASE UNDERTROUGH
11 - SCOOP
12 - LEFT MAGNET
13 - RIGHT MAGNET
14 - CENTER MAGNET
15 - RIGHT SLINGSHOT
16 - GENERAL ILLUMINATION
17 - SPOTLIGHT LOWER LEFT
18 - NOT USED
19 - BACKPANNEL LED STRIP
20 - NOT USED
21 - SPOTLIGHT LOWER RIGHT
22 - SPOTLIGHT UPPER RIGHT
23 - SPOTLIGHT UPPER LEFT
24 - UPPER 3 BALL LOCK DOWNPOST
25 - LEFT POP BUMPER
26 - RIGHT POP BUMPER
27 - CENTER POP BUMPER
28 - UP POST DIVERTER
29 - UPPER CATAPULT
30 - STEAMER TRUCK RELEASE/DIVERTER
31 - NOT USED

FUSES Houdini Quick Reference Guide

Table 5.2 Fuse Table

Fuse Name	Fuse Current	Type	Fuse Voltage
Coil Driver C5	6.3A	5x20 Slow Blow	250V
	6.3A	5x20 Slow Blow	250V
Coil Driver C6	6.3A	5x20 Slow Blow	250V
	4A	5x20 Slow Blow	250V
Main Fuse	6A	3AG Slow Blow	250V

Note: For more information on fuse locations, please refer to the Dipswitch Settings drawing in the Switch Locations chapter.

P-ROC BOARDS

6

Table 6.1 Houdini Board Parts Number table

Board	Section In This Chapter	Part Number
P^3-ROC Board	**Section 1**	**PCB0002-00**
Switch Board (SW-16)	**Section 2**	**PCB0003-00**
Coil Driver Board (PD-16)	**Section 3**	**PCB0004-00**
RGB Driver Board (PD-LED)	**Section 4**	**PCB0008-0**
PCB Board Drawings and Parts	**Section 5**	**Multiple PCB Boards**

SECTION 1: P^3-ROC BOARD OVERVIEW

The P3-ROC is designed to control all of the real-time signaling features on a pinball machine.

Major functionality includes:

- Communication with a host processor via USB
- 2 serial switch board interfaces
  - Monitor and react to switch events from 256 switches via serial switch boards
  - Allow host to read switch states from 1024 switches via serial switch boards
- 64 individual burst switches for frequency controlled IR devices
- 2 serial driver board interfaces
  - Control 256 matrixed or direct drivers on serial driver boards with the following functions:
  - On/Off, Pulse, Schedule, Patter, Pulsed-Patter
  - Pass software commands directly to serial driver boards
- 3-axis accelerometer
- Software accessible I2C interface.
- 8-data / 8-control auxiliary bus with microcode engine
- 8 general purpose I/Os (3.3v)

THEORY OF OPERATION

The P^3-ROC consists primarily of an FPGA, supporting logic, and a bunch of connectors. The FPGA is responsible for driving all of the real-time signaling features on a pinball machine. Upon powerup, the FPGA receives its default configuration from an onboard SPI Flash. It then waits for additional configuration information from a host software program over the USB bus.

The USB signaling is handled by an FTDI FT240X device, which has a FIFO interface connected to the FPGA. All information delivered to the FPGA is held in the FIFO until the FPGA reads it. Similarly, all data written into the FIFO by the FPGA is held until the host requests it.

Once configured by the host software program, the FPGA continuously performs functions such as requesting data from the serial switch chains and reacting to switch state changes, writing driver data through the serial driver chain, requesting accelerometer data and responding to accelerometer interrupts, writing burst switch data to the burst switch drivers, and receiving burst switch data from the burst switch inputs. The FPGA can also be used to communicate with an external I2C device and read/write to memory locations in the SPI flash.

Figure 6.1 P^3-ROC Block Diagram

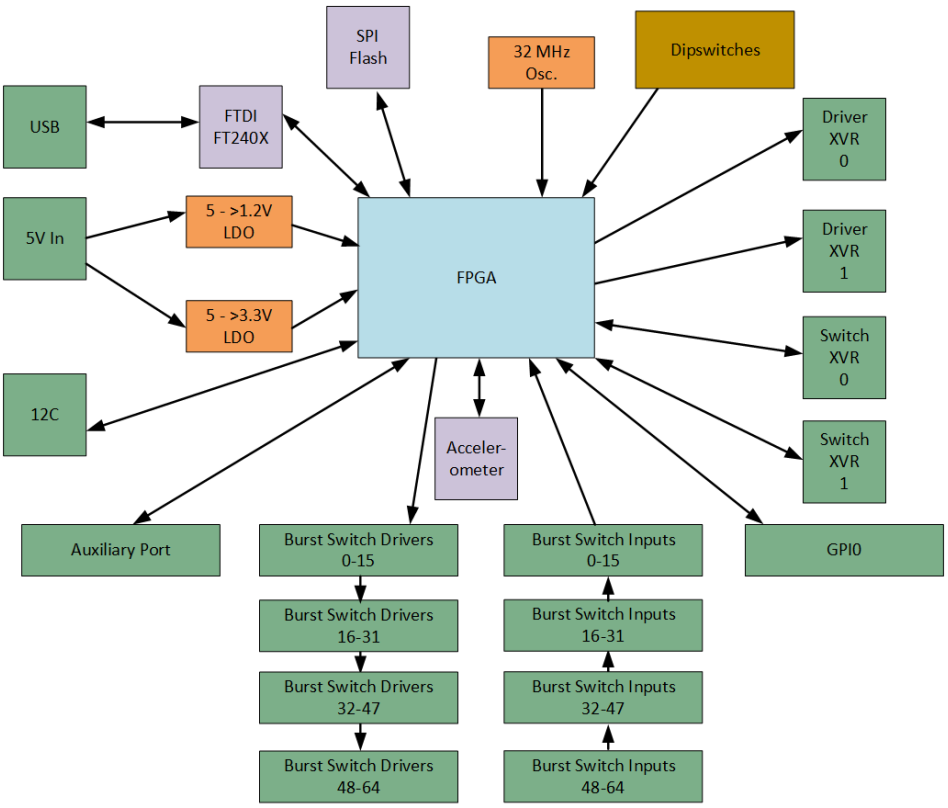

P3-ROC FUNCTIONAL DESCRIPTIONS

USB

A USB interface is used to connect the P^3-ROC to a host computer. Connectivity is provided with a type-B USB connector, and the signaling is controlled by an FTDI FT240X device. The FTDI chip's FIFO (first-in first-out memory) is connected to the FPGA, which can read data from and write data into the FIFO.

BURST SWITCHES

All 64 burst drivers and 64 burst inputs are connected directly to the FPGA. The drivers can be configured in the FPGA to drive a certain number of pulses, each a configurable number of microseconds, before turning off for another configurable number of microseconds. This functionality is necessary to enable frequency tuned infrared receivers to accurately receive infrared light from the pulsed emitters. If

Dipswitch 1 is on, the burst switch output pins [63:0] no longer carry burst switch output information. Instead, they carry driver data, mapping to drivers 63:0, respectively.

If Dipswitch 2 is on, the burst switch input pins [63:0] no longer receive burst switch information. Instead, they receive direct switch data, mapping to serial switch inputs 63:0, respectively.

Note: If a serial switch board with address 0, 1, 2, or 3 is detected in a serial switch chain, the serial switch board data overrides the corresponding direct switch input data.

SERIAL SWITCHES

The P^3-ROC provides two connectors for serial switch board chains. Both connectors are driven with the same information. Every millisecond, the FPGA automatically requests switch data from 16 serial switch board addresses (2 registers representing 8 switches each per address). Therefore 256 switches are automatically scanned by the FPGA.

Host software can read specific addresses from specific switch boards at any time by issuing register read requests. Available destination switch board address are 0-15.

SERIAL DRIVERS

Drivers are used to send on/off signals to devices through serial driver boards. The P^3-ROC provides two connectors for serial driver board chains. Both connectors are driven with the same information.

The FPGA can automatically drive up to 256 drivers, each of which can be configured to operate independently or as part of a matrix. There are no drive outputs on the P3-ROC itself. Rather, they must be connected to the P3-ROC via the serial driver board connectors.

The FPGA provides convenience functions for each driver, thereby freeing up host software from the low level details for each driver. Convenience functions include:

- On/off – Drivers can be configured to be on until they are reconfigured to be off.
- Pulse – Drivers can be configured to be on for a specific number of milliseconds before turning off.

- Schedule – Drivers can be configured to turn on at scheduled times and stay on for a specific number of milliseconds before the schedule is disabled. The scheduled times can be one or more points in time spaced approximately 1/32 of a second apart.
- Patter – Drivers can be configured to repeatedly turn on for a specific number of milliseconds and then off for a specific number of milliseconds.
- Pulsed Patter – Drivers can be configured with a Patter sequence for a specific number of milliseconds before turning off.

CLOCKS

Everything runs off of a 32 Mhz clock.

CONFIGURATION

On power-up, the FPGA, operating in Master Serial mode, automatically loads itself from the SPI Flash. Once loaded, the FPGA waits to be further configured by the host through the USB bus.

If the FPGA ever needs to be updated, it is capable of driving the data pins connected to the SPI

Flash. The host software can write an image into the FPGA which will then write the image into the Flash.

Note: If this operation begins and does not completely successfully, the image in the Flash will be corrupted. This will keep the FPGA from automatically loading correctly on future power-ups until the Flash is replaced or reprogrammed.

A JTAG header is provided as another way to load the FPGA or to rewrite the image in the Xilinx Platform Flash. Using the JTAG header requires a Xilinx programming cable connected to a computer running Xilinx's programming software.

DIPSWITCHES

There are 8 dipswitches on the P3-ROC. They are used as follows:

Table 6.2 P^3-ROC Dipswitches

Switch	Function
1	**Enable Direct Drivers**
2	**Enable Direct Switches**
3	**RESERVED**
4	**RESERVED**
5	**RESERVED**
6	**RESERVED**
7	**Serial Switch Chain 0 Termination**

Switch	Function
8	**Serial Switch Chain 1 Termination**

STATUS

There are 2 power LEDs. When behaving normally, they should all illuminate when the board has power.

Table 6.3 P^3-ROC Power LED Voltage Indication table

LED	Voltage Indication
D50	**3.3V**
D52	**5V**

There are 9 LEDs on the board to provide visual indications about the functionality of the board. The LEDs are driven by the FPGA as follows:

Table 6.4 P^3-ROC FPGA LED Voltage Indication table

LED	Description
D3	**FPGA initialized properly**
D9	**FPGA startup completed**
D5	**32 Mhz clock operational**
D8	**USB communications established**
D7	**Watchdog timer expired (drivers disabled)**
D4	**Pattern***
D6	**Pattern***
D10	**Pattern***
D11	**Pattern***
*D4, D6, D10, and D11 display a rotating pattern. Normal operation is indicated by a single light, rotating counter clockwise.	

CONNECTORS

Table 6.5 P^3-ROC
J1 Power Connector table

J1	Power	
4-pin Molex: 0.200” Spacing		
1	NC	N/A
2	Ground	I
3	Ground	I
4	VCC (5V)	I

Table 6.6 P^3-ROC
J2 Power Connector table

J2	Power	
2-pin Molex: 0.156” Spacing		
1	5V	I
2	Ground	I

Table 6.7 P^3-ROC
J3 Burst Switch table

J3	Burst Switches				
26-pin Header: 0.100” Spacing					
1	3.3V	O	2	Burst Switch Driver 0	O
3	3.3V	O	4	Burst Switch Driver 1	O
5	Burst Switch Driver 6	O	6	Burst Switch Driver 2	O
7	Ground	O	8	Burst Switch Driver 3	O
9	Ground	O	10	Burst Switch Driver 4	O
11	Ground	O	12	Burst Switch Driver 5	O
13	Burst Switch Driver 7	O	14	Burst Switch Input 0	I

J3	Burst Switches				
26-pin Header: 0.100” Spacing					
15	Ground	O	16	Burst Switch Input 1	I
17	Ground	O	18	Burst Switch Input 2	I
19	Ground	O	20	Burst Switch Input 3	I
21	Burst Switch Input 7	I	22	Burst Switch Input 4	I
23	3.3V	O	24	Burst Switch Input 5	I
25	3.3V	O	26	Burst Switch Input 6	I

Table 6.8 P^3-ROC
J4 Burst Switch table

J4	Burst Switches				
26-pin Header: 0.100” Spacing					
1	3.3V	O	2	Burst Switch Driver 32	O
3	3.3V	O	4	Burst Switch Driver 33	O
5	Burst Switch Driver 38	O	6	Burst Switch Driver 34	O
7	Ground	O	8	Burst Switch Driver 35	O
9	Ground	O	10	Burst Switch Driver 36	O
11	Ground	O	12	Burst Switch Driver 37	O
13	Burst Switch Driver 39	O	14	Burst Switch Input 32	I
15	Ground	O	16	Burst Switch Input 33	I
17	Ground	O	18	Burst Switch Input 34	I
19	Ground	O	20	Burst Switch Input 35	I
21	Burst Switch Input 39	I	22	Burst Switch Input 36	I

J4	Burst Switches				
26-pin Header: 0.100” Spacing					
23	3.3V	O	24	Burst Switch Input 37	I
25	3.3V	O	26	Burst Switch Input 38	I

Table 6.9 P^3-ROC
J5 Burst Switch table

J5	Burst Switches				
26-pin Header: 0.100” Spacing					
1	3.3V	O	2	Burst Switch Driver 8	O
3	3.3V	O	4	Burst Switch Driver 9	O
5	Burst Switch Driver 14	O	6	Burst Switch Driver 10	O
7	Ground	O	8	Burst Switch Driver 11	O
9	Ground	O	10	Burst Switch Driver 12	O
11	Ground	O	12	Burst Switch Driver 13	O
13	Burst Switch Driver 15	O	14	Burst Switch Input 8	I
15	Ground	O	16	Burst Switch Input 9	I
17	Ground	O	18	Burst Switch Input 10	I
19	Ground	O	20	Burst Switch Input 11	I
21	Burst Switch Input 15	I	22	Burst Switch Input 12	I
23	3.3V	O	24	Burst Switch Input 13	I
25	3.3V	O	26	Burst Switch Input 14	I

Table 6.10 P^3-ROC
J6 Burst Switch table

J6	Burst Switches				
26-pin Header: 0.100” Spacing					
1	3.3V	O	2	Burst Switch Driver 40	O
3	3.3V	O	4	Burst Switch Driver 41	O
5	Burst Switch Driver 46	O	6	Burst Switch Driver 42	O
7	Ground	O	8	Burst Switch Driver 43	O
9	Ground	O	10	Burst Switch Driver 44	O
11	Ground	O	12	Burst Switch Driver 45	O
13	Burst Switch Driver 47	O	14	Burst Switch Input 40	I
15	Ground	O	16	Burst Switch Input 41	I
17	Ground	O	18	Burst Switch Input 42	I
19	Ground	O	20	Burst Switch Input 43	I
21	Burst Switch Input 47	I	22	Burst Switch Input 44	I
23	3.3V	O	24	Burst Switch Input 45	I
25	3.3V	O	26	Burst Switch Input 46	I

Table 6.11 P^3-ROC
J7 Burst Switch table

J7	Burst Switches				
26-pin Header: 0.100” Spacing					
1	3.3V	O	2	Burst Switch Driver 16	O
3	3.3V	O	4	Burst Switch Driver 17	O
5	Burst Switch Driver 22	O	6	Burst Switch Driver 18	O

J7	Burst Switches				
26-pin Header: 0.100” Spacing					
7	Ground	O	8	Burst Switch Driver 19	O
9	Ground	O	10	Burst Switch Driver 20	O
11	Ground	O	12	Burst Switch Driver 21	O
13	Burst Switch Driver 23	O	14	Burst Switch Input 16	I
15	Ground	O	16	Burst Switch Input 17	I
17	Ground	O	18	Burst Switch Input 18	I
19	Ground	O	20	Burst Switch Input 19	I
21	Burst Switch Input 23	I	22	Burst Switch Input 20	I
23	3.3V	O	24	Burst Switch Input 21	I
25	3.3V	O	26	Burst Switch Input 22	I

Table 6.12 P^3-ROC
J8 Burst Switch table

J8	Burst Switches				
26-pin Header: 0.100” Spacing					
1	3.3V	O	2	Burst Switch Driver 48	O
3	3.3V	O	4	Burst Switch Driver 49	O
5	Burst Switch Driver 54	O	6	Burst Switch Driver 50	O
7	Ground	O	8	Burst Switch Driver 51	O
9	Ground	O	10	Burst Switch Driver 52	O
11	Ground	O	12	Burst Switch Driver 53	O
13	Burst Switch Driver 55	O	14	Burst Switch Input 48	I

J8	Burst Switches				
26-pin Header: 0.100” Spacing					
15	Ground	O	16	Burst Switch Input 49	I
17	Ground	O	18	Burst Switch Input 50	I
19	Ground	O	20	Burst Switch Input 51	I
21	Burst Switch Input 55	I	22	Burst Switch Input 52	I
23	3.3V	O	24	Burst Switch Input 53	I
25	3.3V	O	26	Burst Switch Input 54	I

Table 6.13 P^3-ROC
J9 Burst Switch table

J9	Burst Switches				
26-pin Header: 0.100” Spacing					
1	3.3V	O	2	Burst Switch Driver 24	O
3	3.3V	O	4	Burst Switch Driver 25	O
5	Burst Switch Driver 30	O	6	Burst Switch Driver 26	O
7	Ground	O	8	Burst Switch Driver 27	O
9	Ground	O	10	Burst Switch Driver 28	O
11	Ground	O	12	Burst Switch Driver 29	O
13	Burst Switch Driver 31	O	14	Burst Switch Input 24	I
15	Ground	O	16	Burst Switch Input 25	I
17	Ground	O	18	Burst Switch Input 26	I
19	Ground	O	20	Burst Switch Input 27	I
21	Burst Switch Input 31	I	22	Burst Switch Input 28	I

J9	Burst Switches				
26-pin Header: 0.100” Spacing					
23	3.3V	O	24	Burst Switch Input 29	I
25	3.3V	O	26	Burst Switch Input 30	I

Table 6.14 P^3-ROC
J10 Burst Switch table

J10	Burst Switches				
26-pin Header: 0.100” Spacing					
1	3.3V	O	2	Burst Switch Driver 56	O
3	3.3V	O	4	Burst Switch Driver 57	O
5	Burst Switch Driver 62	O	6	Burst Switch Driver 58	O
7	Ground	O	8	Burst Switch Driver 59	O
9	Ground	O	10	Burst Switch Driver 60	O
11	Ground	O	12	Burst Switch Driver 61	O
13	Burst Switch Driver 63	O	14	Burst Switch Input 56	I
15	Ground	O	16	Burst Switch Input 57	I
17	Ground	O	18	Burst Switch Input 58	I
19	Ground	O	20	Burst Switch Input 59	I
21	Burst Switch Input 63	I	22	Burst Switch Input 60	I
23	3.3V	O	24	Burst Switch Input 61	I
25	3.3V	O	26	Burst Switch Input 62	I

Table 6.15 P^3-ROC
J11 Serial Switches table

J11	Serial Switches 0	
3-pin Molex: 0.100” Spacing		
1	Ground	N/A
2	Serial Switch Data +	I/O
3	Serial Switch Data -	I/O

Table 6.16 P^3-ROC
J12 Serial Drivers table

J12	Serial Drivers 0	
3-pin Molex: 0.100” Spacing		
1	Serial Switch Data +	O
2	Serial Switch Data -	O
3	Ground	O

Table 6.17 P^3-ROC
J13 USB table

J13	USB	
4-pin USB Type B		
1	5B	I
2	Data-	I/O
3	Data+	I/O
4	Ground	I

Table 6.18 P^3-ROC
J14 Serial Switches table

J14	Serial Switches 1	
3-pin Molex: 0.100” Spacing		
1	KEY	N/A
2	Serial Switch Data +	I/O
3	Serial Switch Data -	I/O

Table 6.19 P^3-ROC
J15 Serial Drivers table

J15	Serial Drivers 1	
3-pin Molex: 0.100” Spacing		
1	Serial Switch Data +	O
2	Serial Switch Data -	O
3	KEY	N/A

Table 6.20 P^3-ROC
J16 JTAG Port table

J16	JTAG Port	
14-pin Header: 2mm spacing		
1	Ground	O
2	3.3v	O
3	Ground	O
4	TMS	I
5	Ground	O
6	TCK	I
7	Ground	O
8	TDO	O
9	Ground	O
10	TDI	I
11	Ground	O
12	Ground	O
13	Ground	O
14	Ground	O

Table 6.21 P^3-ROC
J17 I2C table

J17	I2C	
5-pin Molex: 0.100” Spacing		
1	3.3V	O
2	SDA	I/O

J17	I2C	
5-pin Molex: 0.100” Spacing		
3	SCL	I/O
4	Ground	O
5	IRQ	I

Table 6.22 P^3-ROC
J18 Auxiliary Port table

J18	Auxiliary Port				
20-pin Header: 0.100” Spacing					
1	Ground	O	2	Ground	O
3	Aux Data 0	I/O	4	Aux Control 0	O
5	Aux Data 1	I/O	6	Aux Control 1	O
7	Aux Data 2	I/O	8	Aux Control 2	O
9	Aux Data 3	I/O	10	Aux Control 3	O
11	Aux Data 4	I/O	12	Aux Control 4	O
13	Aux Data 5	I/O	14	Aux Control 5	O
15	Aux Data 6	I/O	16	Aux Control 6	O
17	Aux Data 7	I/O	18	Aux Control 7	O
19	Ground	O	20	Ground	O

Table 6.23 P^3-ROC
J19 GPIO table

J19	GPIO	
10-pin Molex: 0.100” Spacing		
1	GPIO 0	I/O
2	GPIO 1	I/O
3	KEY	N/A
4	GPIO 2	I/O
5	GPIO 3	I/O
6	GPIO 4	I/O
7	GPIO 5	I/O
8	GPIO 6	I/O

J19	GPIO	
10-pin Molex: 0.100” Spacing		
9	GPIO 7	I/O
10	Ground	O

POWER

There are 2 power connectors for 5V input. Only one should be used at any one time. J1 is pin compatible with a standard personal computer 4-pin power supply cable commonly used to power disk drives. J2 is a simple 2-pin head for 5V and ground.

3.3V is created from the 5V supply using a 3 amp LDO in a DD-PACK package. Components are available from ST Micro, Linear Tech, TI, and National Semi. 3.3V is used by most of the parts on the board. In addition, external burst switch circuitry is expected to use 3.3V from this board.

1.2V is created from the 5V supply using a 300 milliamp LDO in a SOT23-5 package. Components are available from On Semi and Analog Devices. 1.2V is used for the FPGA's core.

5V is optionally used to power the 74HCT244 and 74HCT245 buffers used for the auxiliary bus. Resistor stuff options allow the buffers to alternatively run on 3.3V.

SECTION 2: SW-16 BOARDS

SW-16 boards are used to deliver switch state information in a pinball machine to a master device, such as a P^3-ROC board, over an RS-485 serial bus.

SW-16 OVERVIEW

The SW-16 has two banks of 8 switch inputs. Each input has a 6v comparator circuit, which determines the state of the switch connected to the input. If the voltage is below 6v, the state of the switch is '0'. Otherwise the state of the switch is '1'. Each input also has a pull-up resistor, forcing the state to '1' when nothing is connected to the input.

In addition to the switch input circuits, The SW-16 has a bidirectional RS-485 transceiver, 6 address dipswitches, and a complex programmable logic device (CPLD). The RS-485 transceiver converts RS-485 signals to digital logic signals (and vice versa) so the CPLD can communicate on the RS-485 bus. The CPLD responds to host-initiated commands when the command's address matches the value set on the 6 address dipswitches. The only commands currently supported are register read commands.

Table 6.24 SW-16: J1 Power Connector table

J1	Power	Required
3-pin Molex: 0.156” Spacing		
1	**KEY**	**N/A**
2	**12V**	**I**
3	**Ground**	**I**

Table 6.25 SW-16: J2 Bank A Switch Inputs table

J2	Bank A Switch Inputs	Required if using Bank A
10-pin Molex: 0.100” Spacing		
1	**12V**	**O**
2	**Bank A – Switch 0**	**I**
3	**Bank A – Switch 1**	**I**
4	**Bank A – Switch 2**	**I**
5	**Bank A – Switch 3**	**I**
6	**Bank A – Switch 4**	**I**
7	**Bank A – Switch 5**	**I**
8	**Bank A – Switch 6**	**I**
9	**Bank A – Switch 7**	**I**
10	**Ground**	**O**

Table 6.26 SW-16: J3 Serial Data In table

J3	Serial Data In	Required
3-pin Molex: 0.100” Spacing		
1	**Ground**	**I**
2	**Serial Data +**	**I**
3	**Serial Data -**	**I**

Table 6.27 SW-16: J4 Serial Data Out table

J4	Serial Data Out	Not Required
3-pin Molex: 0.100” Spacing		
1	**Ground**	**O**
2	**Serial Data +**	**O**
3	**Serial Data -**	**O**

Table 6.28 SW-16: J6 Bank B Switch Inputs table

J6	Bank B Switch Inputs	Required if using Bank B
10-pin Molex: 0.100” Spacing		
1	**12V**	**I**
2	**Bank B – Switch 0**	**I**
3	**Bank B – Switch 1**	**I**
4	**Bank B – Switch 2**	**I**
5	**Bank B – Switch 3**	**I**
6	**Bank B – Switch 4**	**I**
7	**Bank B – Switch 5**	**I**
8	**Bank B – Switch 6**	**I**
9	**Bank B – Switch 7**	**I**
10	**Ground**	**O**

BOARD ADDRESS

In order to receive the correct data from the P-ROC board, each board’s address must be set appropriately. The following table describes how to use the dipswitches to set the board address.

Table 6.29 SW-16 Board Address Dipswitch table

Dipswitch	Description
1	**Address bit 0***
2	**Address bit 1***
3	**Address bit 2***

Dipswitch	Description
4	**Address bit 3***
5	**Address bit 4***
6	**Address bit 5***
7	**ID bit 5**
*On = 1, Off = 0	

BOARD ID

The board ID is a value that can be read by software, and it is configurable via the following dipswitch and resistor placement options.

Table 6.30 SW-16 Board ID table

ID Bit	Resistor (for 0/1)
0	**R84/R90**
1	**R86/R91**
2	**R87/R92**
3	**R88/R93**
4	**R89/R94**

SERIAL CHAIN TERMINATION

The last board in the physical chain (not necessarily the highest address) must be set to terminate the serial chain. This is done by setting dipswitch 8 to on.

Table 6.31 SW-16 Status LEDs table

LED	Description
D5	**12V**
D6	**3.3V**
D8	**CPLD Operational**

DIPSWITCHES

Table 6.32 SW-16 LED Dipswitches table

Dipswitch	Description
1	**Address bit 0***
2	**Address bit 1***
3	**Address bit 2***

Dipswitch	Description
4	**Address bit 3***
5	**Address bit 4***
6	**Address bit 5***
7	**ID bit 5**
8	**Terminate serial bus**
*On = 1, Off = 0	

REGISTERS

Table 6.33 SW-16 Register Device Type table

Device Type		Address 0x0
Bits	**Field**	**Default**
7:0	**Device Type**	**0xA3**

Table 6.34 SW-16 Register Board ID table

Board ID		Address 0x1
Bits	**Field**	**Default**
7:0	**Board ID (configurable - see Board ID section above)**	**NA**

Table 6.35 SW-16 Register Bank A Switches table

Bank A Switches		Address 0x2
Bits	**Field**	**Default**
7:0	**Board A Switch States**	**0xFF**

Table 6.36 SW-16 Register Bank B Switches table

Bank B Switches		Address 0x3
Bits	**Field**	**Default**
7:0	**Board B Switch States**	**0xFF**

Figure 6.2 SW-16 Board Usage

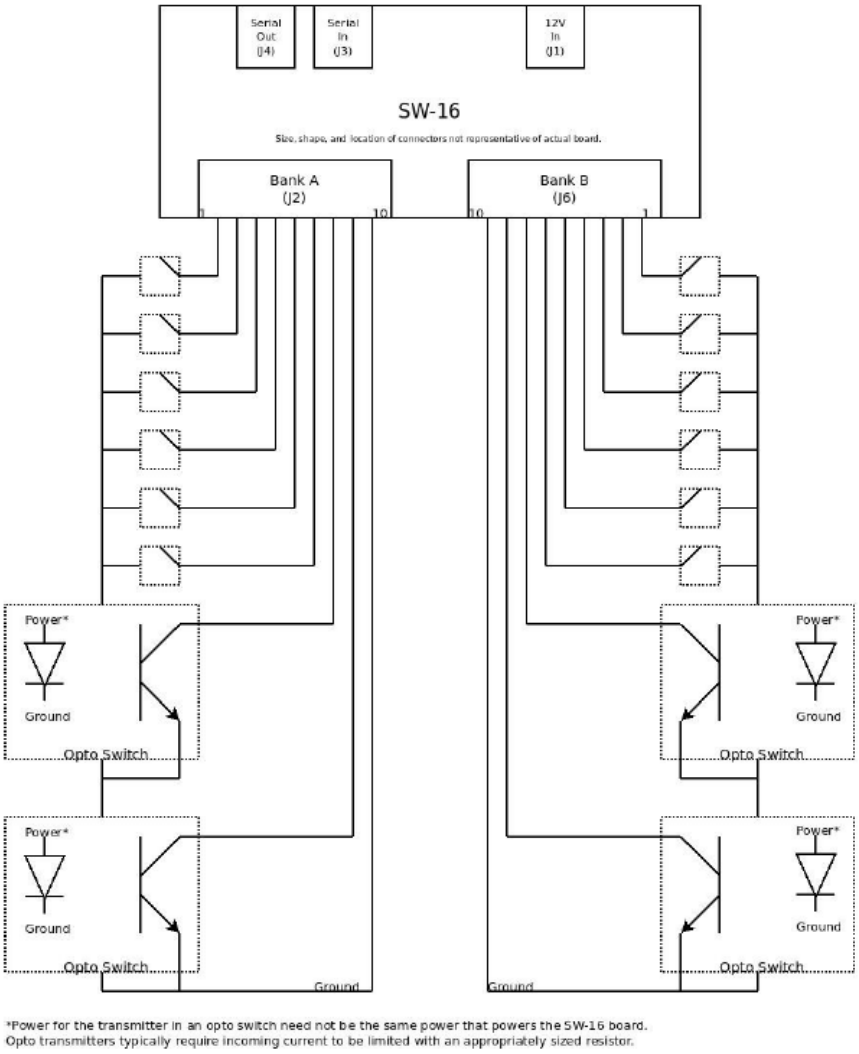

To install the SW-16 Board hardware

1. **Mount the board using the 4 mounting holes (M3 or 4-40 screws).**
2. **Connect a 12V supply to J1.**
3. **Using a 2-wire cable, connect J3 to the previous board in the chain.**

   If the boards are separated by more than a few feet, American Pinball recommends a shielded and twisted pair. For short runs, any 2-wire cable should suffice.
4. **If using Bank A: Connect the Bank A switches to J2.**
5. **If using Bank B: Connect the Bank B switches to J6.**

To install the SW-16 Driver Board software

Once configured, the P-ROC automatically scans the SW-16 Board for switch state changes. Switches map to P^3-ROC switch numbers according to the following equations.

- **Bank A switch: P^3-ROC switch # = SW-16 address * 16 + Bank A switch input**
- **Bank B switch: P^3-ROC switch # = SW-16 address * 16 + 8 + Bank B switch input #**
- **SW-16 registers can also be read directly from software. Refer to the P^3-ROC-ROC FPGA Specifications for more details.**

SECTION 3: P-ROC PD-16 DRIVER BOARDS

The P-ROC Driver Boards are used to control the activation of connected devices by turning on or off power to the devices in response to commands from a P-ROC. The boards receive commands from the P-ROC over an RS-485 serial bus which allows many boards to be chained together and used simultaneously.

There are three different types of Driver Boards that can be used to make up a chain:

- Master
- Power Driver 16
- Power Driver Matrix 8x8

P-ROC POWER DRIVER 16 OVERVIEW

The Power Driver 16 has two banks of 8 n-channel MOSFETs. Each FET is individually controlled and creates a path to ground when activated. Each bank has a power input header on which it can accept DC power up to 80V. The input power goes through a fuse and is used as a reference for the nchannel FETS. The fused power also goes to a convenience power output header which can be used to supply constant power to one side of the external devices.

The other side of the external devices are connected to the FETs via a keyed 9-pin header. When the FETs are activated in response to commands from the P-ROC, the path to ground is completed, and the devices are activated.

These boards are typically used to control pinball machine features such as coils, motors, flashlamps, individual lamps/leds, etc.

All 16 circuits require an active high signal from the controller (P-ROC, Arduino, etc) to turn on and an active low signal to turn off. Logic on the board itself takes care of driving the transistors properly.

P-ROC POWER DRIVER CONNECTORS

Table 6.37 Power Driver 16
J1 Logic Power table

J1	Logic Power	Required
2-pin Molex: 0.156” Spacing		
1	**5V**	**I**
2	**Ground**	**I**

Table 6.38 Power Driver 16
J9 Logic Serial Data In table

J9	Serial Data In	Required
3-pin Molex: 0.100” Spacing		
1	**Serial+**	**I**
2	**Serial-**	**I**
3	**Ground**	**I**

Table 6.39 Power Driver 16 J10
Serial Data Out table

J10	Serial Data Out	Not Required
3-pin Molex: 0.100” Spacing		
1	**Serial+**	**O**
2	**Serial-**	**O**
3	**Ground**	**O**

Table 6.40 Power Driver 16 J5
Bank A High Power In table

J5	Bank A High Power In	Required if using Bank A
3-pin Molex: 0.156” Spacing		
1	**5 to 80V DC**	**I**
2	**KEY**	**N/A**
3	**Ground**	**I**

Table 6.41 Power Driver 16 J3
Bank A High Power Out table

J3	Bank A High Power Out	Recommended if using Bank A
3-pin Molex: 0.156” Spacing		
1	**Fused High Power Out**	**O**
2	**Fused High Power Out**	**O**
3	**KEY**	**N/A**

Table 6.42 Power Driver 16 J7 Bank A
Device Power Inputs table

J7	Bank A Device Power Inputs	Required if using Bank A
9-pin Molex: 0.156” Spacing		
1	**Bank A - Data 0**	**I**
2	**KEY**	**I**
3	**Bank A - Data 1**	**I**
4	**Bank A - Data 2**	**I**
5	**Bank A - Data 3**	**I**
6	**Bank A - Data 4**	**I**
7	**Bank A - Data 5**	**I**
8	**Bank A - Data 6**	**I**
9	**Bank A - Data 7**	**I**

Table 6.43 Power Driver 16 J6
Bank B High Power In table

J6	Bank B High Power In	Required if using Bank B
3-pin Molex: 0.156” Spacing		
1	**5 to 80V DC**	**I**
2	**KEY**	**N/A**
3	**Ground**	**I**

Table 6.44 Power Driver 16 J4
Bank B High Power Out table

J4	Bank B High Power Out	Recommended if using Bank B
3-pin Molex: 0.156” Spacing		
1	**Fused High Power Output**	**O**
2	**Fused High Power Output**	**O**
3	**KEY**	**N/A**

Table 6.45 Power Driver 16 J11
Bank B Device Power Inputs table

J11	Bank B Device Power Inputs	Required if using Bank B
9-pin Molex: 0.156” Spacing		
1	**Bank B - Data 0**	**I**
2	**Bank B - Data 1**	**I**
3	**KEY**	**N/A**
4	**Bank B - Data 2**	**I**
5	**Bank B - Data 3**	**I**
6	**Bank B - Data 4**	**I**
7	**Bank B - Data 5**	**I**
8	**Bank B - Data 6**	**I**
9	**Bank B - Data 7**	**I**

P-ROC BOARD ADDRESS CONFIGURATION

In order to receive the correct data from the P-ROC board, each board's address needs to be set appropriately. The following table describes how to use the dipswitch to set the board address.

Table 6.46 Power Driver 16 Address Dipswitches table

Dipswitch	Description
1	**Address bit 0***
2	**Address bit 1***
3	**Address bit 2***
4	**Address bit 3***

Dipswitch	Description
*On = 1, Off = 0	

When the P-ROC board is configured, groups of 8 data bits are assigned to indexes. Bits 3:1 of those indexes should correspond to the desired driver board's address, and bit 0 corresponds to the desired bank (0=Bank A, 1=Bank B).

The following table illustrates how direct addresses and P-ROC group enable indexes map to the Driver Board addresses and banks:

Table 6.47 Power Driver 16 Address table

Driver Board Address/Register Address	P-ROC Driver Group Enable Index	Driver Board Address/Bank
0/0	0	0/A
0/1	1	0/B
1/0	2	1/A
1/1	3	1/B
2/0	4	2/A
2/1	5	2/B
3/0	6	3/A
3/1	7	3/B
4/0	8	4/A
4/1	9	4/B
5/0	10	5/A
5/1	11	5/B
6/0	12	6/A
6/1	13	6/B
7/0	14	7/A
7/1	15	7/B
x/0	N/A	x/A
x/1	N/A	x/B

Table 6.48 Power Driver 16 LEDs for Driver Board table

LED	Description
D2	5V
D3	3.3V
D4	Fused Bank A power
D5	Fused Bank B power
D14	Watchdog expired

Table 6.49 Power Driver 16 Switches for Driver Board table

Switch	Description
1	Address bit 0
2	Address bit 1
3	Address bit 2
4	Address bit 3
5	N/A
6	Watchdog disable
7	N/A
8	Terminate serial bus
*On = 1, Off = 0	

PROTECTION

FUSES

High Power In goes through a fuse in each bank:

- Bank A: F1
- Bank B: F2

It is recommended that users use the High Power Out connectors to supply constant power to the devices being controlled with the board.

Bank A devices should get power from J3, and Bank B devices should get power from J4. This help isolate device problems on each bank by, hopefully, preventing issues on one bank from affecting devices on other banks. Users should make sure to use a fuse with the proper current rating for their application. If a fuse comes installed in the board, it is not guaranteed to be the proper rating for every application.

WATCHDOG

Each board has a watchdog circuit that keeps the FETs deactivated when the board is not receiving commands from the Master. This may happen due to a failure in the P-ROC or in the Master, or it could be due to a wiring issue in the serial chain. LED D14 lights up when the FETs are deactivated due to the watchdog timer expiring.

Note: This watchdog functionality is disabled when dipswitch 6 is on.

FLYBACK DIODES

Each transistor circuit includes a flyback diode to eliminate voltage spikes on inductive loads, such as coils. It is therefore unnecessary to put diodes on coils activated by this board.

SERIAL CHAIN TERMINATION

The last board in the physical chain (not necessarily the highest address) needs to be set to terminate the serial chain. This is done by setting dipswitch 8 to on.

PDB PROTOCOL

The PDB Protocol describes the format of data being received on the Data Input pin (J8: pin-1). This is also the format for the serial data sent out on J10.

Table 6.50 Power Driver 16
PDB Protocol table

Serial Bus Protocol (PDB Protocol)	
Bit	**Field**
Byte 0	**{0,0,Board Address[5:0]}**
<between bytes>	**1-5 IDLE clock cycles**
Byte 1	**{0,0,0,0,0,Command[2:0]}: 0: Read 1: Write 2: RESERVED 3: RESERVED 4: RESERVED 5: RESERVED 6: RESERVED 7: Clear all registers on board**
<between bytes>	**1-5 IDLE clock cycles**
Byte 2	**{0,0,Register Address[5:0]}: 0: Bank A 1: Bank B**
<between bytes>	**1-5 IDLE clock cycles**
Byte 3	**{0,0,0,0,Bank data bits[7:4]}**

Serial Bus Protocol (PDB Protocol)	
Bit	**Field**
<between bytes>	**1-5 IDLE clock cycles**
Byte 4	**{0,0,0,0,Bank data bits[3:0]}**

PDB Protocol Requirements

- Each byte is sent MSB first.
- A transaction consists of 5 data bytes. There must be at least 10 IDLE cycles between transactions. Between each byte of a transaction there must be between 1 and 5 IDLE cycles.
- The data signal must be high during all IDLE cycles.
- Data must be sent at 8 MHz, 125ns per bit.
- The Bank data bits in Bytes 3 and 4 are all active high. A '1' will turn the corresponding circuit on, and a '0' will turn the corresponding circuit off.

Figure 6.3 Power Driver 16 Usage

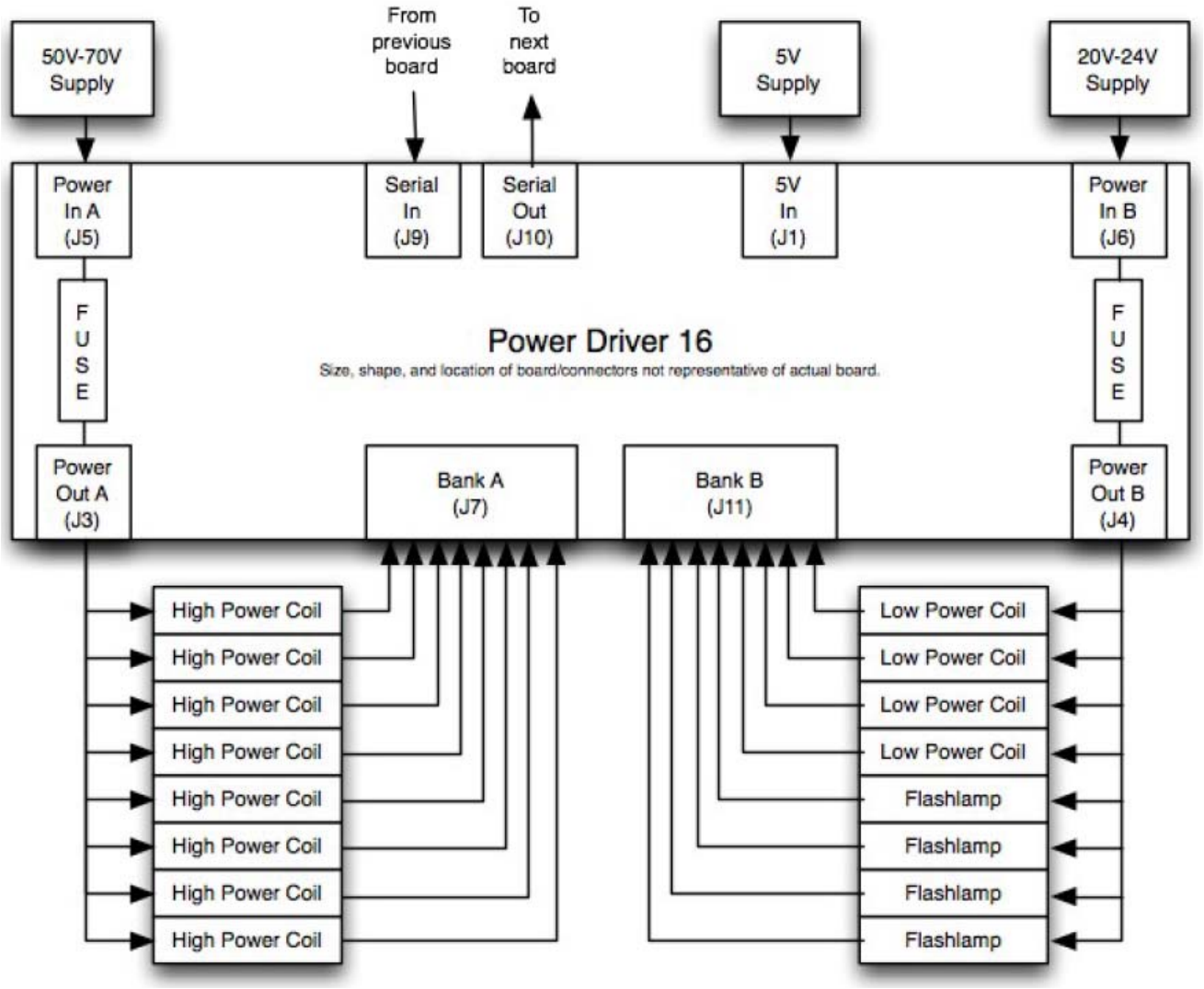

To install the P-ROC Driver Board hardware

1. **Mount the board using the 4 mounting holes.**
2. **Connect a 5V supply to J1.**
3. **Using a 2-wire cable, connect J9 to the previous board in the chain.**

   If the boards are separated by more than a few feet, American Pinball recommends a shielded and twisted pair. For short runs, any 2-wire cable should suffice.

If using Bank A to install the P-ROC Driver Board

1. **Connect the power source (5V-80V DC) to J5.**
2. **Use J3 to supply power to the Bank A devices.**
3. **Connect Bank A devices to J7 so the driver board can complete the path to ground to activate the devices when commanded.**
4. **Use an appropriately-rated fuse for your application in F1.**

I using Bank B to install the P-ROC Driver Board

1. **Connect the power source (5V-80V DC) to J6.**
2. **Use J4 to supply power to the Bank B devices.**
3. **Connect Bank B devices to J11 so the driver board can complete the path to ground to activate the devices when commanded.**
4. **Use an appropriately-rated fuse for your application in F2.**

To install the driver board software

Once configured, the P-ROC automatically controls a chain of driver boards.

1. **If using a P-ROC for configuration: Configure the P-ROC's Output Controller to use active high polarity.**
2. **Set up the P-ROC's Driver Groups as appropriate for your application.**

   Note: For sample configurations and help, visit the PinballControllers.com Driver Board forum at http://www.pinballcontrollers.com/forum/index.php?board=16.0

   Alternatively, software can control the Driver Board chain directly through the P-ROC by issuing writes to the P-ROC's Serial Bus Output register. Refer to the P-ROC FPGA Specifications for more details.

3. **If using a microcontroller for configuration: Implement the PDB Protocol described previously in this chapter.**

   Note: Sample code for the Arduino microcontroller can be found at http://www.pinballcontrollers.com/index.php/products/driverboards/ driver-board-faq/83

SECTION 4: PD LED-2 BOARDS

The PD-LED-2 has 84 individual drive pins and can, therefore, control up to 84 individual LEDs in parallel or up to 682 individually addressable serially-chained RGB LEDs. When controlling LEDs in parallel, each drive pin operates independently, based on commands sent to the board from an external RS-485 bus master. The commands are interpreted by a local logic chip, which then turns the individual drive pins on or off as instructed. To control individually addressable serially-chained RGB LEDs, a few of the drive pins can be configured to drive the data for up to 6 LED chains.

PD LED-2 OVERVIEW

To control the LEDs, there are 2048 color registers. For the parallel-controlled drive pins, color registers 0-83 each control a drive pin. When serial chains are being driven, any or all of the 2048 color registers can drive LEDs in the serial chain(s). The PD-LED-2 supports driving up to three individual WS281x LED chains and up to three individual LPD880x LED chains. Each of the chains can be configured to use consecutive sets of the LED color registers, of which there are 2048. Parallel-driven LEDs and serially chained LEDs can be controlled simultaneously. Note – when using

the PD-LED-2 to drive LED serial chains, the serial chains must be powered externally. The PD-LED-2 should not be used to supply power to the chain(s).

The PD-LED-2 can be programmed to set the intensity level of an LED to one of 256 levels. Level 0 is off, meaning the board will drive the pin low (ground). Level 255 is on, meaning the board will drive the pin high (3.3v). All other levels result in the board driving the pin on and off repeatedly, where the on and off times are different, depending on the level. High level values have long on times and short off times, and low level values value have short on times and long off times. The resulting PWM (pulse width modulation) determines the intensity of the LED.

The board can also be programmed to fade the intensity level from one level to another. When fading, the board will increment or decrement the drive intensity level at a programmable rate, one level at a time until the final level is reached.

RGB (RED-GREEN-BLUE) LEDS

Since RGB LEDs are, essentially, three LEDs in one package, this board can control up to 28 RGB LEDs (84 / 3 = 28) in parallel or 682 individually addressable RGB LEDs connected through serial chains. 256 levels per LED results in a possible color depth for RGB LEDs of 16M colors (256*256*256).

POWER/CURRENT

Each LED output is limited to 22mA of current. For designs requiring more current to be delivered to one or more LEDs, use the PD-LED-2 board's LED outputs to turn on/off transistors or FETs, through which more current can be supplied from a power source.

PD-LED-2 PROGRAMMING

Configuring the PD-LED-2 and changing the colors of the LEDs its controlling require writing to registers. There are a set of direct registers and a set of indirect registers. Indirect registers are programmed by writing to the direct data and address registers.

Note: Refer to the Direct Registers and Indirect Registers sections for a listing of each register or register range.

LED colors are changed by directly writing the color registers. LEDs can automatically fade to another color by writing a fade rate followed by the destination color.

For serial LED chain control, the serial chain control logic must be configured. First the full range of LEDs that are mapped to serial chains is programmed into a serial string manager. The serial string manager can also be configured with timing parameters for WS281x-type serial chains.

The PD-LED- 2 can be configured to control either WS2811 or WS2812 serial strings at one time. Even multiple WS2811 or multiple WS2812 serial strings can be driven at once, but both timings (WS2811 and WS2812) can not be used at the same time). Next, each of three WS281x serial chain controllers and each of three LPD880x serial chain controllers is configured with the range of LEDs they should drive. Finally, each of the six serial chain controllers is individually enabled.

To change the color of an individual LED

1. **Write the lower 8 bits of the LED's index number to the Address direct register [7:0].**

2. **Write the upper 8 bits of the LED's index number to the Address direct register [15:8].**
3. **Write the desired intensity level to the Color direct register.**

To fade an LED's color

1. **Write the lower 8 bits of the fade rate to the Fade Rate [7:0] direct register.**
2. **Write the upper 8 bits of the fade rate to the Fade Rate [15:8] direct register.**
3. **Write the lower 8 bits of the LED's index number to the Address direct register [7:0].**
4. **Write the upper 8 bits of the LED's index number to the Address direct register [15:8].**
5. **Write the desired intensity level to the Fade Destination Color direct register.**

ENABLING A SERIAL CHAIN

There are six enable bits in the Serial Chain Control Register, which is accessed through the indirect register bus. Each bit enables one of the Serial Chain Controllers, of which there are three for WS281x chains and three for LPD8806 chains. When a chain is enabled, the corresponding pins (See the Connectors section) are used for driving the serial chain rather than driving parallel LEDs.

To enable one or more serial LED chains

1. **Write the address of the Serial Chain Enable Register into the Data direct register.**
2. **Set the desired enable bits in the Address direct register [7:0].**

SERIAL CHAIN MANAGER CONFIGURATION

The Serial Chain Manager determines which of the PD-LED-2's LEDs are available to be driven onto serial chains. There are two sub-managers in the Serial Chain Manager. The first is configured with a starting LED number and an ending LED number. The second is configured with just a starting number, as the second sub-manager is assumed to make available the same number of LEDs as the first submanager.

Note: Making LEDs available to LED chains does not require them to be driven onto chains, but only LEDs that are made available to LED chains can be driven onto chains.

The Serial Chain Manager works by retrieving the LED color information for a sequence of LEDs and then making that data available to Serial Chain Controllers so they can drive the data onto the serial chain pins. All Serial Chain Controllers are updated at the exact same speed, and that speed is determined by the configuration of the Serial Chain Manager. The more LEDs that the Serial Chain Manager services and the slower the timing parameters are configured, the longer it takes to update each Serial Chain Controller. Upon finishing an update cycle, the Serial Chain Manager immediate starts the next cycle.

By using both sub-managers, the time it takes to service all of the LEDs can be halved. When using both sub-managers, two LED valus are retrieved at the same time (one by sub-manager A and one by sub-manager B). Note, the Serial Chain Controllers can only service data from one sub manager at a time. So using both sub-managers usually means there are at least two serial chains.

Indirect registers used to configure the Serial Chain Manager include:

Serial String A Start	Sub-Manager A's first LED
Serial String A End	Sub-Manager A's last LED
Serial String B Start	Sub-Manager B's first LED
WS281X Low Bit Time	The total number of 32 MHz clock cycles to drive the data signal high for a low bit. (Default is 13 for WS2812)
WS281x High Bit Time	The total number of 32 MHz clock cycles to drive the data signal high for a high bit. (Default is 24 for WS2812)
WS281x End Bit Time	The total number 32 MHz clock cycles to drive the data signal high and then low for a single data bit. (Default is 40 for WS2812)
WS281x Reset Bit Time	The total number of 32 MHz clock cycles to drive the data bit low to complete the update cycle for the entire chain. (Default is 1603 for WS2812)

As a timing example, assume that 500 RGB LEDs are driven onto LED chains, and the chains use the default WS2812 timing. The total time it takes to update the entire chain is ((500 RGBs * 3 (for 1500 individual LEDs) * 40 clock cycles) + 1603) * (1 / 32 MHz) = 1.925ms.

To configure the Serial Chain Manager

1. **Write the address of the desired indirect register into the Data direct register.**
2. **Write the desired data into the Address direct registers.**

CONFIGURING THE SERIAL CHAIN CONTROLLERS

There are six Serial Chain Controllers, each of which connects directly to FPGA pins (1 pin for WS281x, 2 pins for LPD880x). Each controller is configured with the first and last LED numbers to drive its pins. The data for all of the LEDs between the first and last LED numbers, inclusive, will be driven onto the pins during each cycle. The cycle update frequency depends on the configuration of the Serial Chain Manager.

To configure a Serial Chain Controller:

1. **Write the address of the desired indirect register into the Data direct register.**
2. **Write the desired data into the Address direct registers.**

LED CONNECTORS

Table 6.51 PD-LED-2 J1 Logic Power table

J1	Logic Power	Required
2-pin Molex: 0.156" Spacing		
1	**5V**	**I**

J1	Logic Power	Required
2-pin Molex: 0.156” Spacing		
2	Ground	I

Table 6.52 PD-LED-2 J2 Serial Data In table

J2	Serial Data In	Required
3-pin Molex: 0.100” Spacing		
1	Serial+	I
2	Serial-	I
3	Ground	I

Table 6.53 PD-LED-2 J3 Serial Data Out table

J3	Serial Data out	Not Required
3-pin Molex: 0.100” Spacing		
1	Serial+	O
2	Serial-	O
3	Ground	O

Table 6.54 PD-LED-2 J5 LED Drivers table

J5	LED Drivers				
20-pin Header: 0.100” Spacing					
1	3.3V	O	2	LED 0	O
3	LED 1	O	4	LED 2	O
5	Ground	O	6	3.3V	O
7	LED 3	O	8	LED 4	O
9	LED 5	O	10	Ground	O
11	3.3V	O	12	LED 6	O
13	LED 7	O	14	LED 8	O
15	Ground	O	16	3.3V	O
17	LED 9	O	18	LED 10	O

J5	LED Drivers				
20-pin Header: 0.100” Spacing					
19	LED 11	O	20	Ground	O

Table 6.55 PD-LED-2 J9 LED Drivers table

J9	LED Drivers				
20-pin Header: 0.100” Spacing					
1	3.3V	O	2	LED 12	O
3	LED 13	O	4	LED 14	O
5	Ground	O	6	3.3V	O
7	LED 15	O	8	LED 16	O
9	LED 17	O	10	Ground	O
11	3.3V	O	12	LED 18	O
13	LED 19	O	14	LED 20	O
15	Ground	O	16	3.3V	O
17	LED 21	O	18	LED 22	O
19	LED 23	O	20	Ground	O

Table 6.56 PD-LED-2 J6 LED Drivers table

J6	LED Drivers				
20-pin Header: 0.100” Spacing					
1	3.3V	O	2	LED 24	O
3	LED 13	O	4	LED 26	O
5	Ground	O	6	3.3V	O
7	LED 15	O	8	LED 28	O
9	LED 17	O	10	Ground	O
11	3.3V	O	12	LED 30	O
13	LED 19	O	14	LED 32	O
15	Ground	O	16	3.3V	O
17	LED 21	O	18	Ground	O
19	LED 23	O	20	Ground	O

Table 6.57 PD-LED-2 J10 LED Drivers table

J10	LED Drivers				
20-pin Header: 0.100” Spacing					
1	3.3V	O	2	LED 36	O
3	LED 37	O	4	LED 38	O
5	Ground	O	6	3.3V	O
7	LED 39	O	8	LED 40	O
9	LED 41	O	10	Ground	O
11	3.3V	O	12	LED 42	O
13	LED 43	O	14	LED 44	O
15	Ground	O	16	3.3V	O
17	LED 45	O	18	LED 46	O
19	LED 47	O	20	Ground	O

Table 6.58 PD-LED-2 J7 LED Drivers table

J7	LED Drivers				
20-pin Header: 0.100” Spacing					
1	3.3V	O	2	LED 48	O
3	LED 49	O	4	LED 50	O
5	Ground	O	6	3.3V	O
7	LED 51	O	8	LED 52	O
9	LED 53	O	10	Ground	O
11	3.3V	O	12	LED 54	O
13	LED 55	O	14	LED 56	O
15	Ground	O	16	3.3V	O
17	LED 57	O	18	LED 58	O
19	LED 59	O	20	Ground	O

Table 6.59 PD-LED-2 J11 LED Drivers table

J11	LED Drivers				
20-pin Header: 0.100” Spacing					
1	3.3V	O	2	LED 60	O

J11	LED Drivers				
20-pin Header: 0.100” Spacing					
3	LED 63	O	4	LED 62	O
5	Ground	O	6	3.3V	O
7	LED 63	O	8	LED 64	O
9	LED 65	O	10	Ground	O
11	3.3V	O	12	LED 66	O
13	LED 67	O	14	LED 68	O
15	Ground	O	16	3.3V	O
17	LED 69	O	18	LED 70	O
19	LED 71	O	20	Ground	O

Table 6.60 PD-LED-2 J8 LED Drivers table

J8	LED Drivers				
20-pin Header: 0.100” Spacing					
1	3.3V	O	2	LED 72	O
3	LED 73	O	4	LED 74	O
5	Ground	O	6	3.3V	O
7	LED 75 or LPD880x Serial Clock 2	O	8	LED 76 or LPD880x Serial Data 2	O
9	LED 77 or LPD880x Serial Clock 1	O	10	Ground	O
11	3.3V	O	12	LED 78 or LPD880x Serial Data 1	O
13	LED 79 or LPD880x Serial Clock 0	O	14	LED 80 or LPD880x Serial Data 0	O
15	Ground	O	16	3.3V	O
17	LED 81 or WS281x Serial Data 2	O	18	LED 82 or WS281x Serial Data 1	O
19	LED 83 or WS281x Serial Data 0	O	20	Ground	O

STATUS LEDS

Table 6.61 PD-LED-2 Status LEDs table

LED	Description
D1	**3.3V**
D2	**5.0V**
D3	**Watchdog expired**
D4	**Ready**

DIPSWITCHES

Table 6.62 PD-LED-2 Dipswitches table

Dipswitch	Description
1	**Address bit 0***
2	**Address bit 1***
3	**Address bit 2***
4	**Address bit 3***
5	**Address bit 4***
6	**LED reset value**
7	**Watchdog disable**
8	**Terminate serial bus**
*On = 1, Off = 0	

SERIAL CHAIN TERMINATION

The last board in the physical chain (not necessarily the highest address) must be set to terminate the serial chain. This is done by setting dipswitch 8 to on.

BOARD ADDRESS

In order to receive the correct data from the bus master, the board address must be set appropriately. The following table describes how to use the dipswitches to set the board address.

Table 6.63 PD-LED-2 Board Address Dipswitch table

Dipswitch	Description
1	**Address bit 0***
2	**Address bit 1***
3	**Address bit 2***

Dipswitch	Description
4	**Address bit 3***
5	**Address bit 4***
*On = 1, Off = 0	

DIRECT REGISTERS

Table 6.64 PD-LED-2 Serial Bus Direct Registers table

Serial Bus Register Address	Serial Bus Data
0	**Address [7:0]**
1	**Color**
2	**Fade Destination Color**
3	**Fade Rate [7:0]***
4	**Fade Rate [15:8]***
5	**RESERVED**
6	**Address [15:8]**
7	**Data**
Note: Registers are all 8-bits wide ***Fade Rates have 4ms resolutions (1 = 4ms, 2 = 8ms....256 = 1s)**	

INDIRECT REGISTERS

To access indirect registers, first write the direct address registers, and then write the direct data register. Writing the direct data register causes the write to complete.

Direct Data Register and Direct Address Register are counter-intuitive. The contents of the Direct Data Register serve as the function address, and the contents of the Direct Address Register serve as the function data.

Table 6.65 PD-LED-2 Direct Data Register table

Direct Data Register	Direct Address Register
0	**Serial Chain Enable Register**
1	**Serial String A Start**
2	**Serial String A End**
3	**Serial String B Start**
4	**WS281x Low Bit Time**
5	**WS281x High Bit Time**
6	**WS281x End Bit Time**

Direct Data Register	Direct Address Register
7	**WS281x Reset Bit Time**
8	**WS281x[0] First Address**
9	**WS281x[0] Last Address**
10	**WS281x[1] First Address**
11	**WS281x[1] Last Address**
12	**WS281x[2] First Address**
13	**WS281x[2] Last Address**
15:14	**RESERVED**
16	**LPD880x[0] First Address**
17	**LPD880x[0] Last Address**
18	**LPD880x[1] First Address**
19	**LPD880x[1] Last Address**
20	**LPD880x[2] First Address**
21	**LPD880x[2] Last Address**

SERIAL CHAIN ENABLE REGISTER

Table 6.66 PD-LED-2 Serial Chain Enable Register table

Direct Data Register	Direct Address Register
0	**use_ws281x[0]**
1	**use_ws281x[1]**
2	**use_ws281x[2]**
3	**use_lpd880x[0]**
4	**use_lpd880x[1]**
5	**use_lpd880x[2]**

PDB PROTOCOL

The PDB Protocol describes the format of data being received on the Data Input pin (J8: pin-1). This is also the format for the serial data sent out on J10.

Table 6.67 PD-LED-2 Serial Bus (PDB) Protocol table

Serial Bus Protocol (PDB Protocol)	
Bit	**Field**
Byte 0	**{0,0,Board Address[5:0]}**
<between bytes>	**1-5 IDLE clock cycles**
Byte 1	**{0,0,0,0,0,Command[2:0]}: 0: Read 1: Write 2: RESERVED 3: RESERVED 4: RESERVED 5: RESERVED 6: RESERVED 7: Clear all registers on board**
<between bytes>	**1-5 IDLE clock cycles**
Byte 2	**{0,0,Register Address[5:0]}: 0: Bank A 1: Bank B**
<between bytes>	**1-5 IDLE clock cycles**
Byte 3	**{0,0,0,0,Bank data bits[7:4]}**
<between bytes>	**1-5 IDLE clock cycles**
Byte 4	**{0,0,0,0,Bank data bits[3:0]}**

PDB Protocol Requirements

- Each byte is sent MSB first.
- A transaction consists of 5 data bytes. There must be at least 10 IDLE cycles between transactions. Between each byte of a transaction there must be between 1 and 5 IDLE cycles. The data signal must be high during all IDLE cycles.
- Data must be sent at 8 MHz, 125ns per bit.
- The Bank data bits in Bytes 3 and 4 are all active high. A '1' turns the corresponding circuit on, and a '0' turns the corresponding circuit off.

To install the P-ROC LED Board hardware

1. **Mount the board using the 4 mounting holes.**
2. **Connect a 5V supply to J1.**
3. **Using a 2-wire cable, connect J2 to the previous board in the chain.**

   If the boards are separated by more than a few feet, American Pinball recommends a shielded and twisted pair. For short runs, any 2-wire cable should suffice.
4. **Connect LEDs to the appropriate J5-J11 pins.**

SECTION 5: BOARD DRAWINGS AND PARTS

Figure 6.4 PCB005 Servo Board Drawing

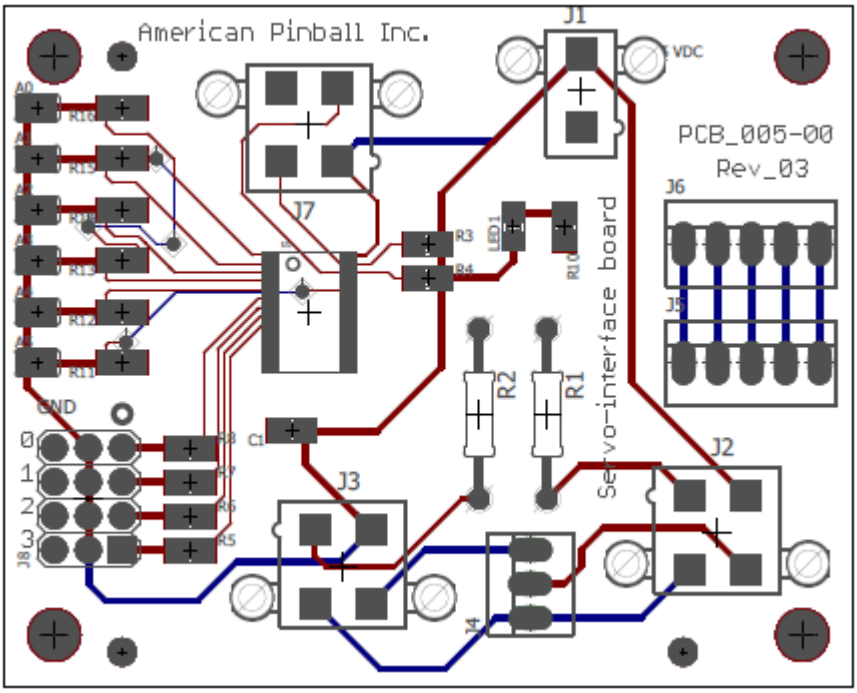

Figure 6.5 PCB005 Schematic

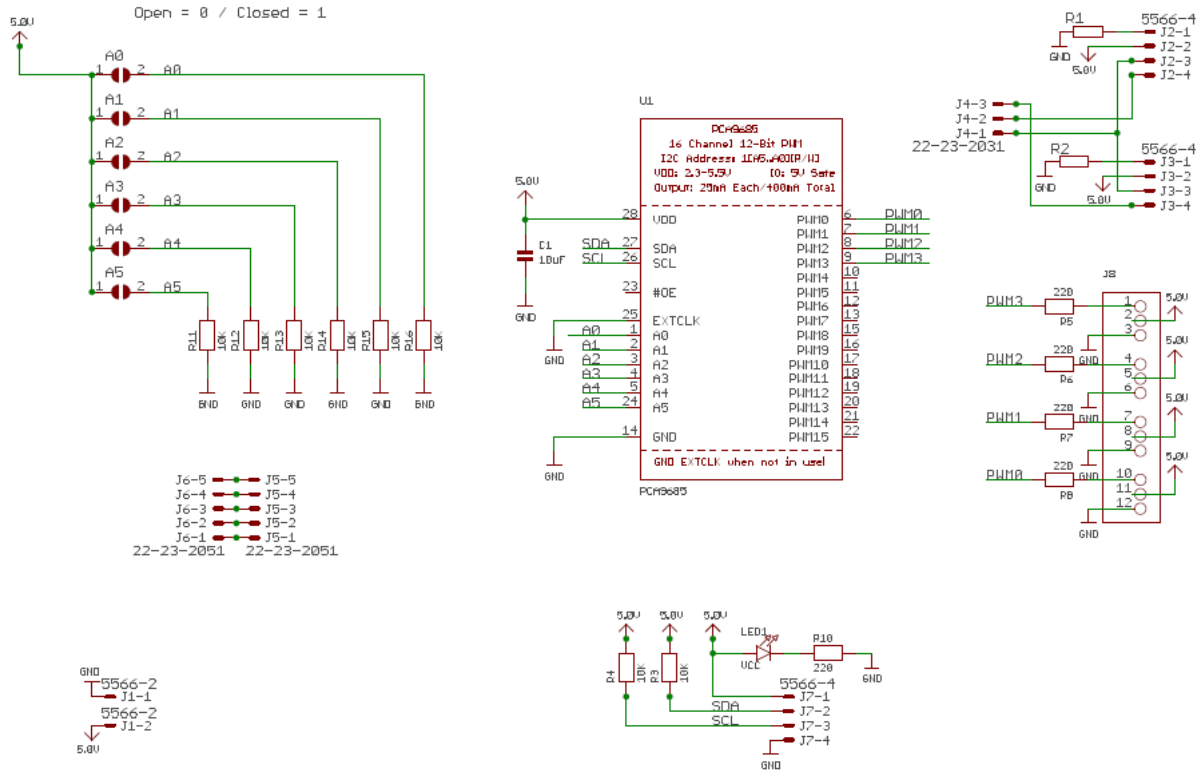

Table 6.68 Board Parts for PCB005

Quantity	Part Description	Part Number	Additional Info
6	Solder Jumper	N/A	Solder Reflow No Paste
1	Capacitor MLCC - 0805 16volts	5L	10 µF
1	Header, 2-Pin, Dual row	39281023	Header 1X2
2	Header 4 pin, Dual row	39299042	Header 4X2
12	Resistor 1W 27 Ohm	PPC27W-1TR-ND	27Ω
2	Conn Header 5 Pos .100 Vert Tin	22-23-2051	Header 5X1
1	Conn Header 3 Pos .100 Vert Tin	22-23-2031	Header 3X1
1	LED, 0805	SML-LXT0805IW-TR	Red LED
8	Resistor 1/4W 0805	RK73B2ATTD103J	10K Ω
5	Resistor 1/4 W 0805	RK73B2ATTD221J	220 Ω
1	IC Driver 25 MA, 28TSSOP	PCA9685PW/Q900,118	PCA9685

Quantity	Part Description	Part Number	Additional Info
1	3x4 Conn Pins .100, 12 Pin	103817-2	3x4 Connector
1	Header 4 pin, Dual Row Red Colored	39299042	Header 4X2

Figure 6.6 PCB009 All Layers

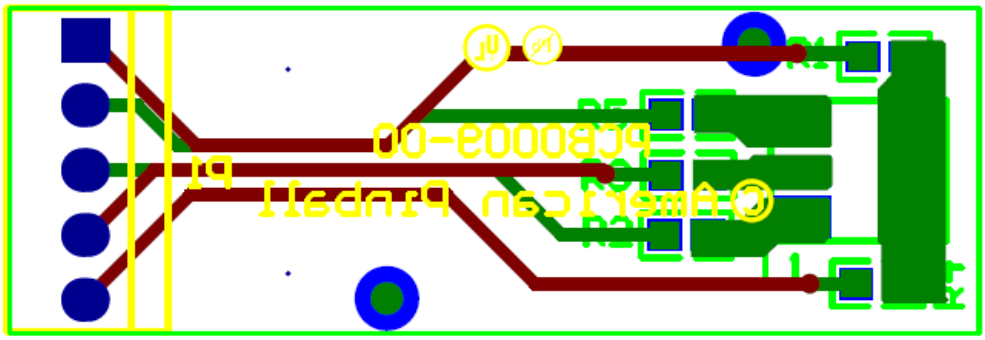

Figure 6.7 PCB009 Bottom View

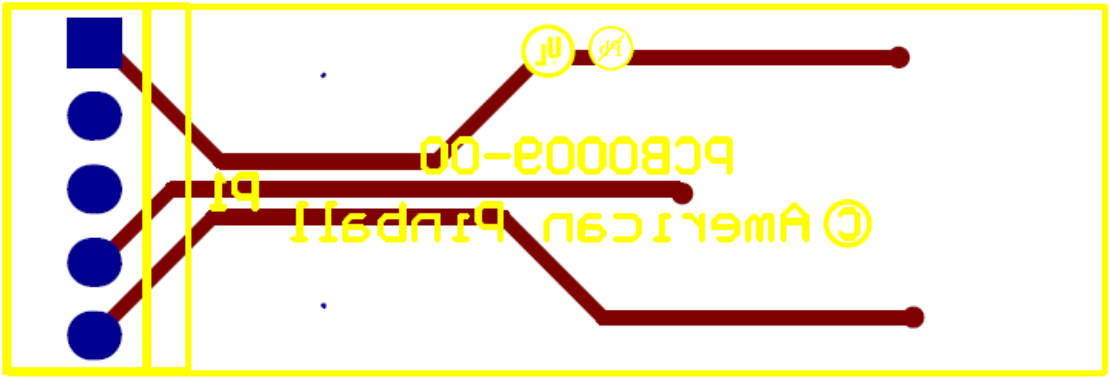

Figure 6.8 PCB009 Top View

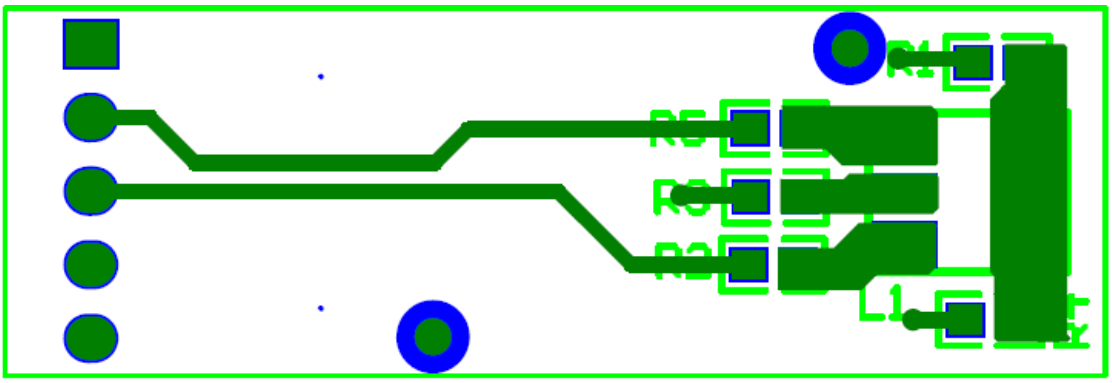

Figure 6.9 PCB009 Schematic

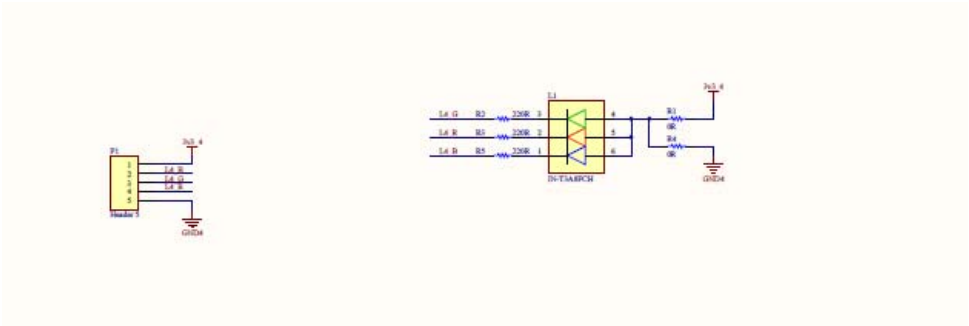

Table 6.69 Board Parts for PCB009

Quantity	Part Description	Part Number	Additional Info
1	IN-T3A8FCH RGB LED	IN-T3A8FCH	
1	Header, 5-Pin	22232051	Header 5
1	Resistor	RC0603JR-070RL	0R
1	Resistor	RC0603JR-070RL	0R
3	Resistor	RC0603JR-07220RL	220R

Figure 6.10 PCB0010 All Layers

Figure 6.11 PCB0010 Bottom View

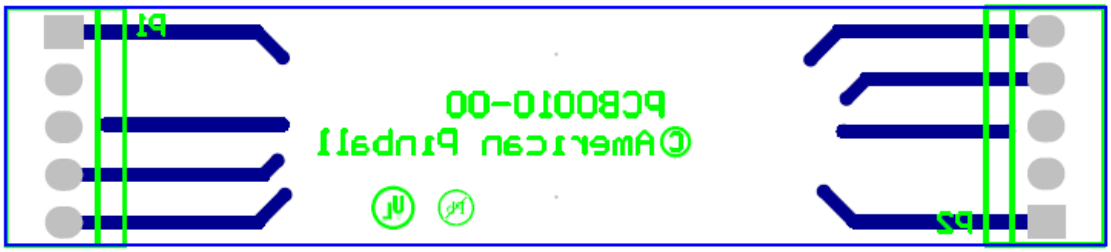

Figure 6.12 PCB0010 Top View

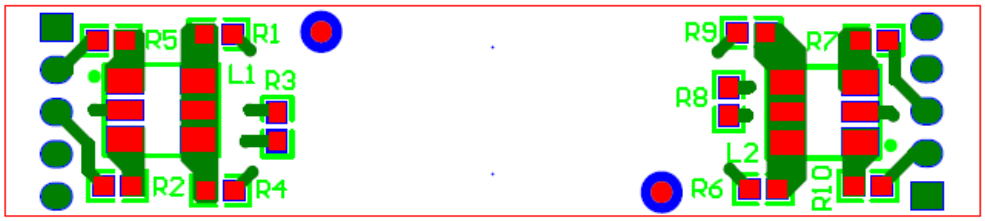

Figure 6.13 PCB010 Schematic

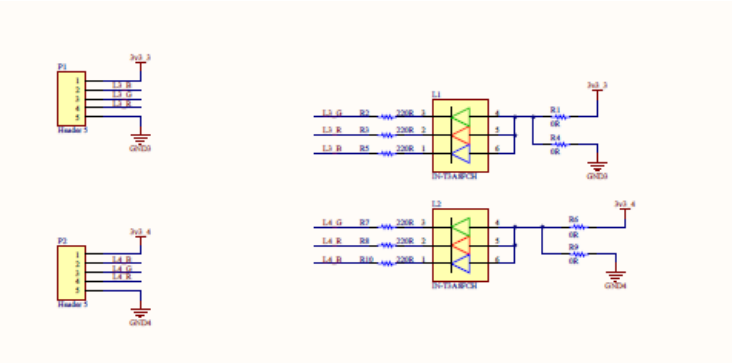

Table 6.70 Board Parts for PCB010

Quantity	Part Description	Part Number	Additional Info
2	IN-T3A8FCH RGB LED	IN-T3A8FCH	
2	Header, 5-Pin	22232051	Header 5
2	Resistor	RC0603JR-070RL	0R
2	Resistor	RC0603JR-070RL	0R
6	Resistor	RC0603JR-07220RL	220R

Figure 6.14 PCB0011 All Layers

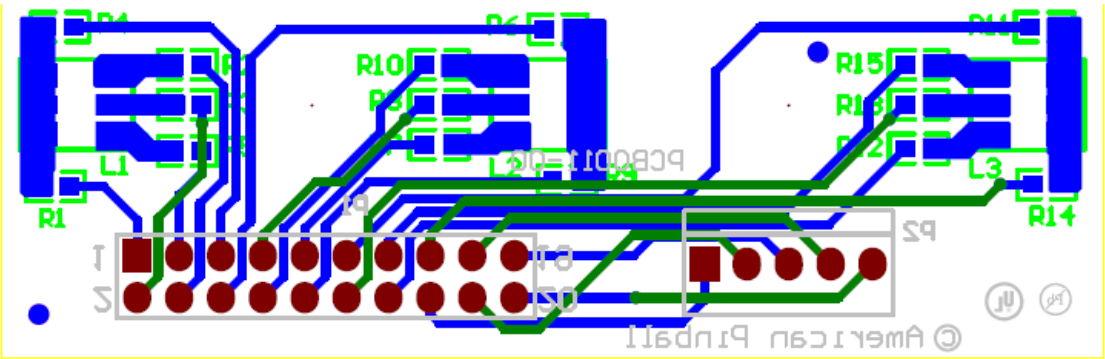

Figure 6.15 PCB0011 Bottom View

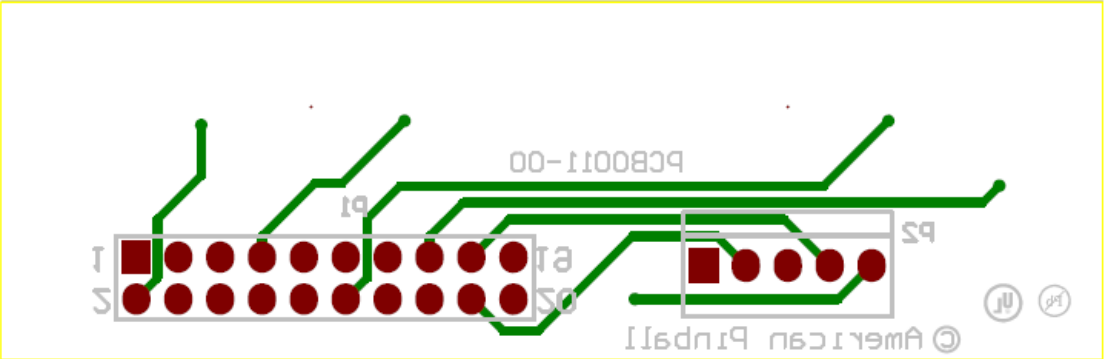

Figure 6.16 PCB0011 Top View

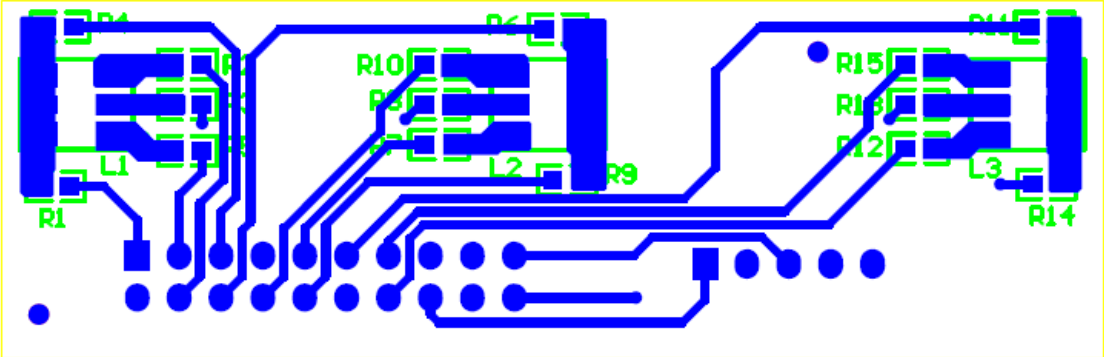

Figure 6.17 PCB011 Schematic

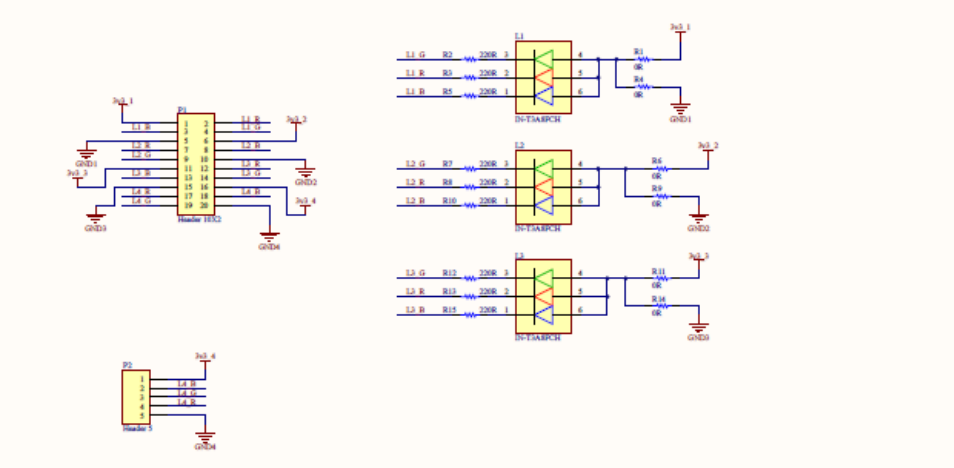

Table 6.71 Board Parts for PCB011

Quantity	Part Description	Part Number	Additional Info
3	IN-T3A8FCH RGB LED	**IN-T3A8FCH**	
1	Header, 10-Pin, Dual Row	**67997-410HLF**	**Header 10X2**
1	Header, 5-Pin	**22232051**	**Header 5**
3	Resistor	**RC0603JR-070RL**	**0R**
3	Resistor	**RC0603JR-070RL**	**0R**
9	Resistor	**RC0603JR-07220RL**	**220R**

Figure 6.18 PCB012 All Layers

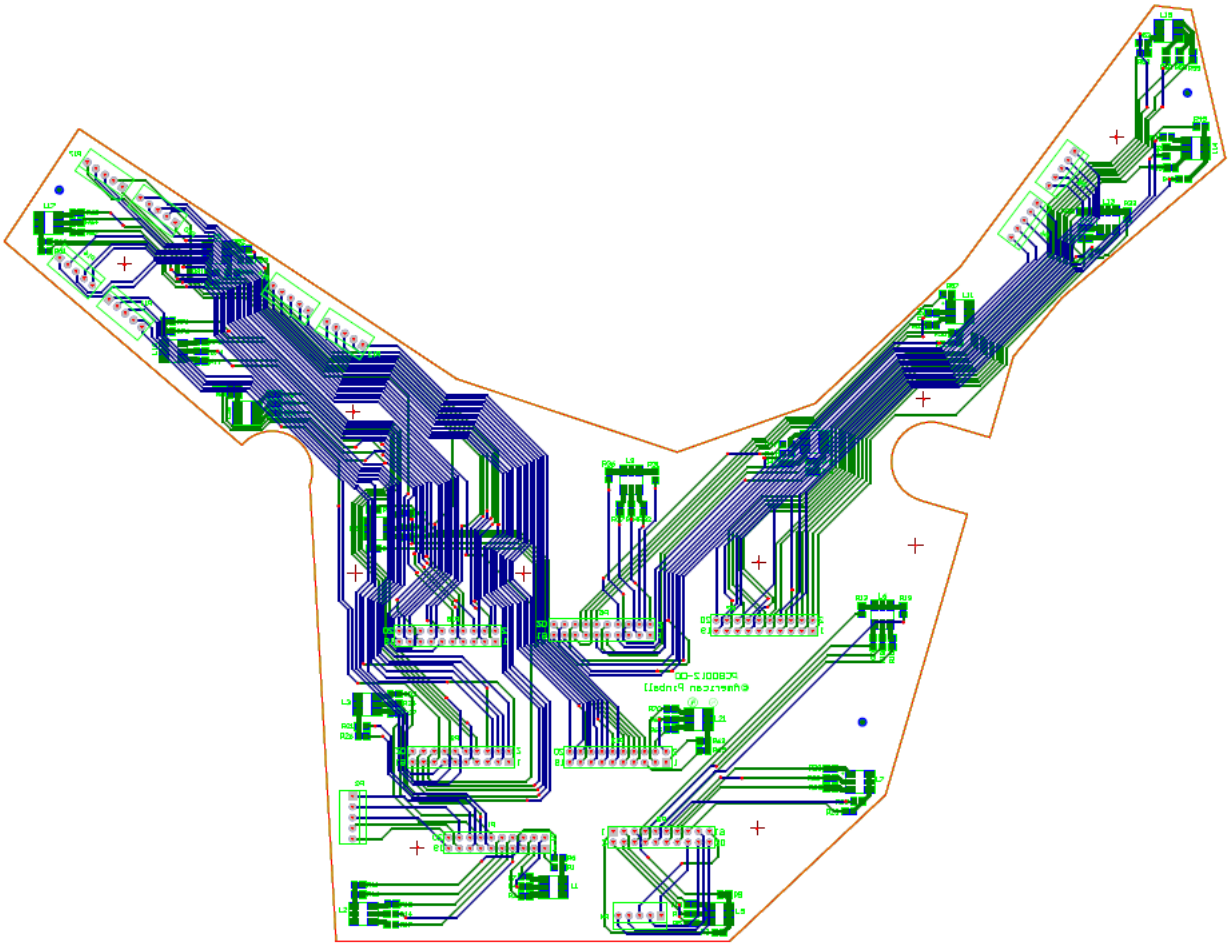

Figure 6.19 PCB012 Bottom View

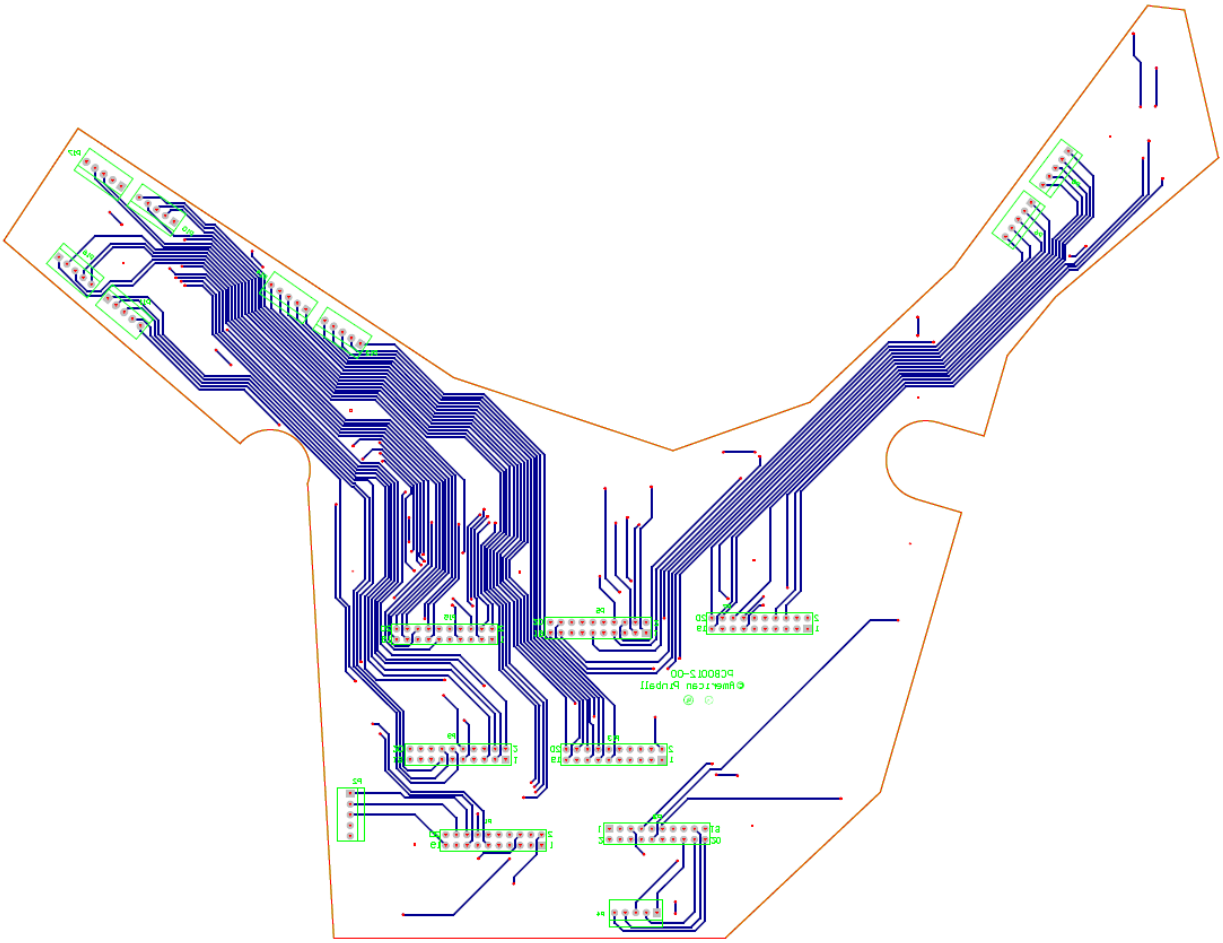

Figure 6.20 PCB012 Top View

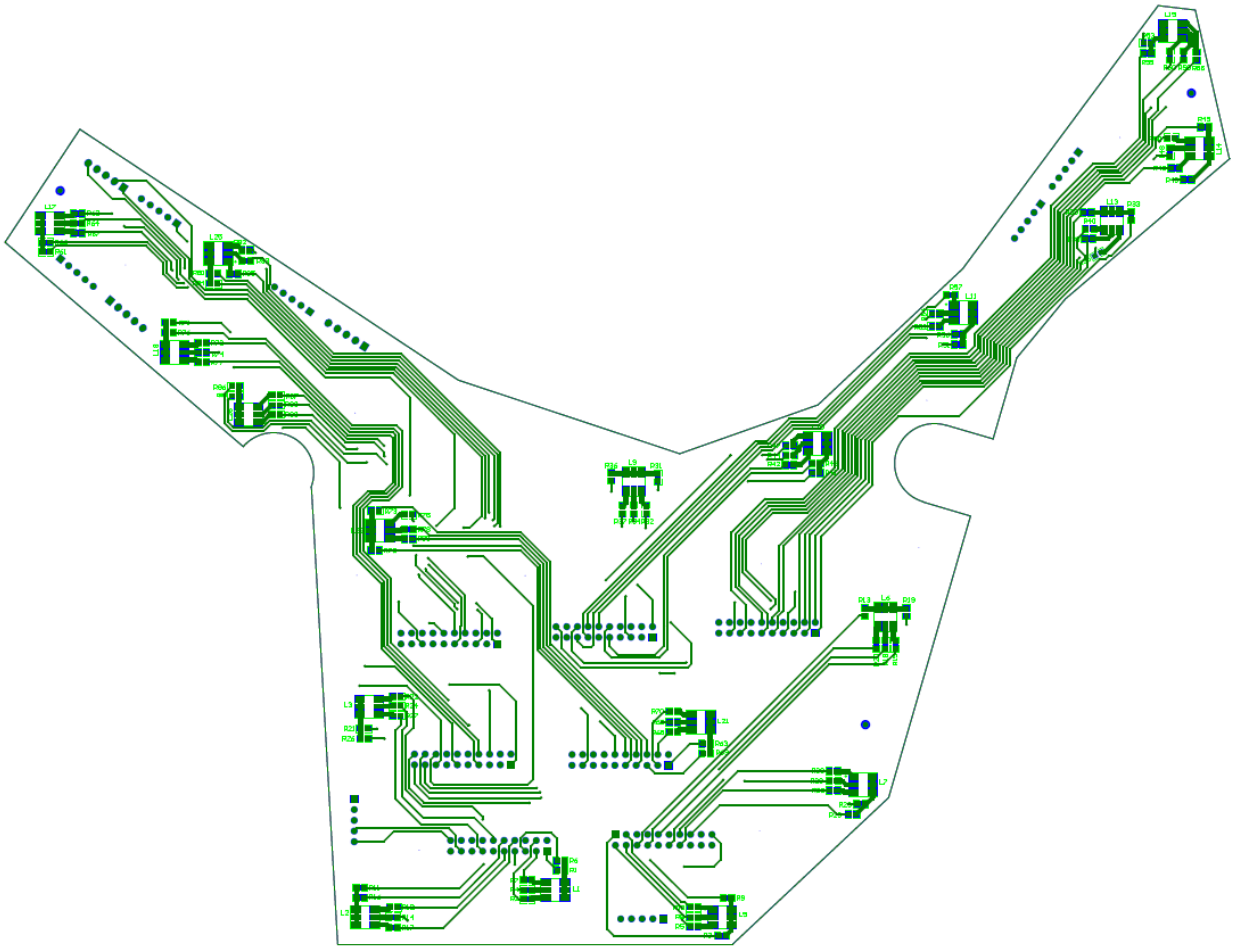

Figure 6.21 PCB012 Schematic

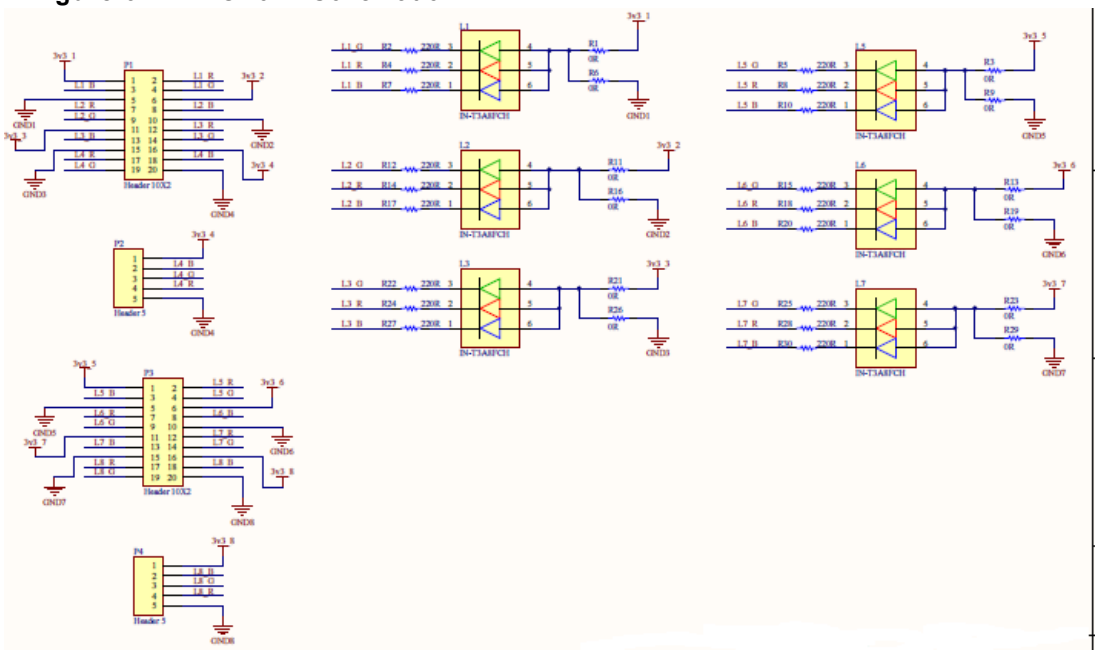

Table 6.72 Board Parts for PCB012

Quantity	Part Description	Part Number	Additional Info
18	IN-T3A8FCH RGB LED	**IN-T3A8FCH**	
7	Header, 10-Pin, Dual Row	**67997-410HLF**	**Header 10X2**
10	Header, 5-Pin	**22232051**	**Header 5**
18	Resistor	**RC0603JR-070RL**	**0R**
18	Resistor	**RC0603JR-070RL**	**0R**
54	Resistor	**RC0603JR-07220RL**	**220R**

Figure 6.22 PCB0013 All Layers

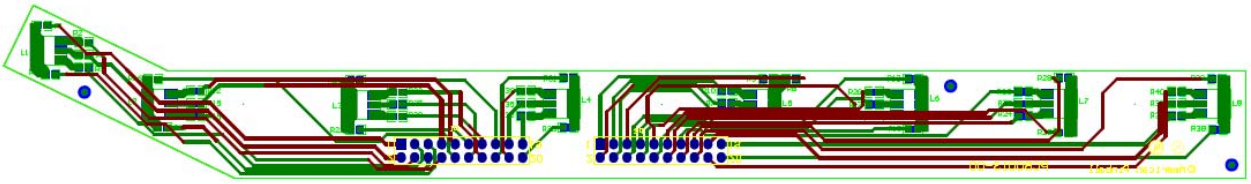

Figure 6.23 PCB0013 Bottom View

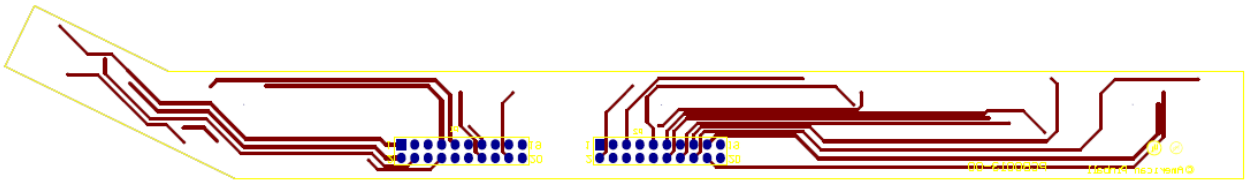

Figure 6.24 PCB0013 Top View

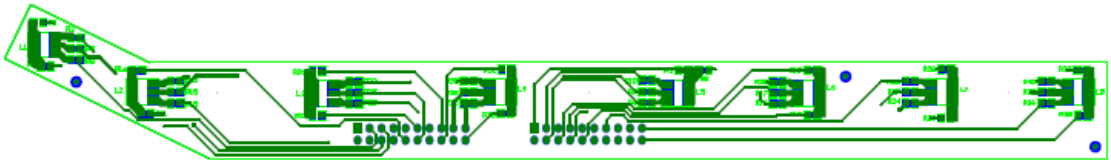

Figure 6.25 PCB013 Schematic

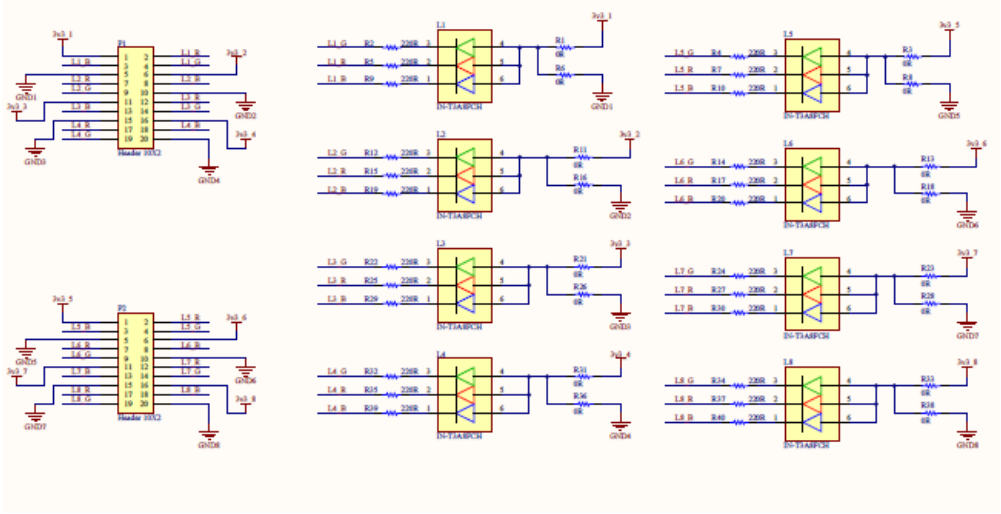

Table 6.73 Board Parts for PCB013

Quantity	Part Description	Part Number	Additional Info
8	IN-T3A8FCH RGB LED	**IN-T3A8FCH**	
2	Header, 10-Pin, Dual Row	**67997-410HLF**	**Header 10X2**
8	Resistor	**RC0603JR-070RL**	**0R**
8	Resistor	**RC0603JR-070RL**	**0R**
24	Resistor	**RC0603JR-07220RL**	**220R**

Figure 6.26 PCB014 All Layers

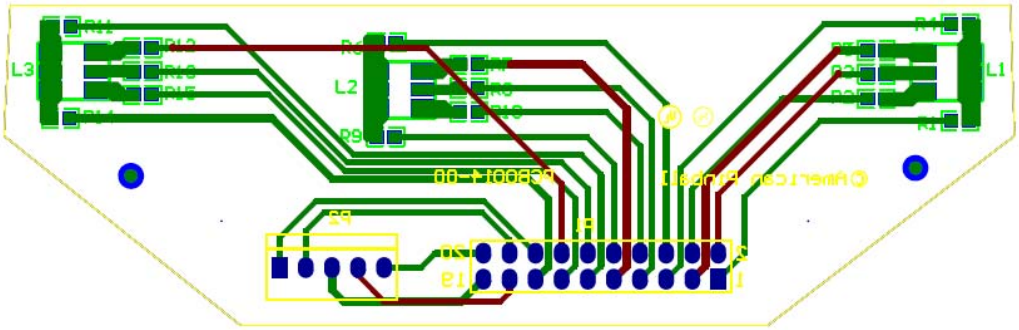

Figure 6.27 PCB014 Bottom View

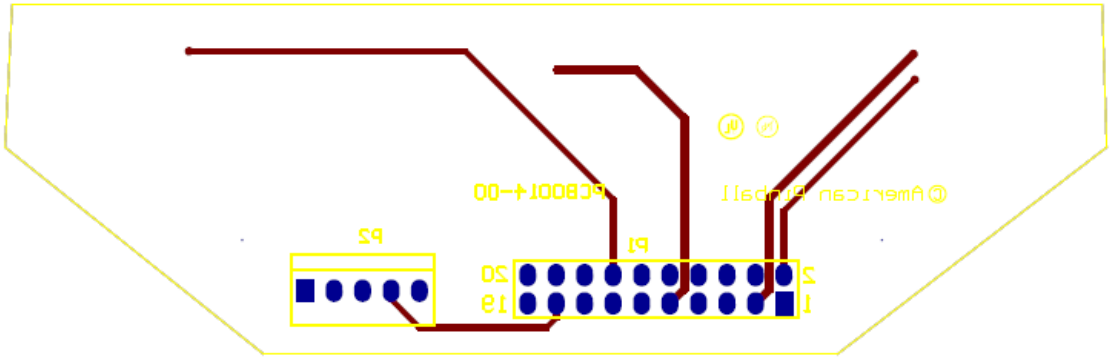

Figure 6.28 PCB014 Top View

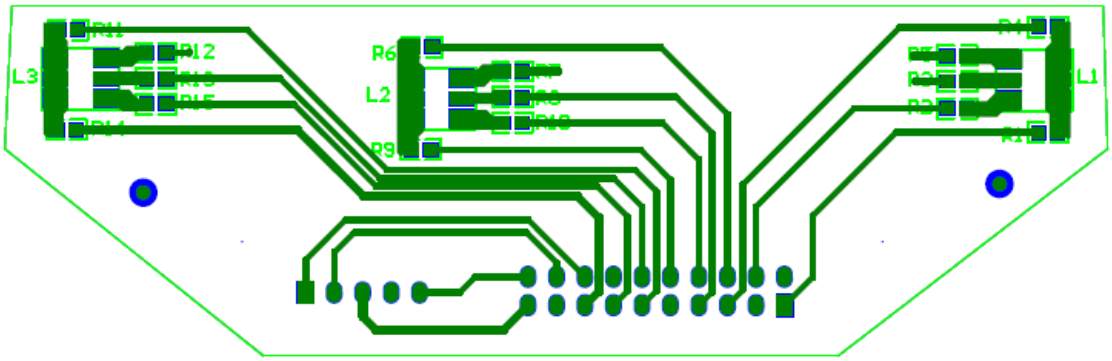

Figure 6.29 PCB014 Schematic

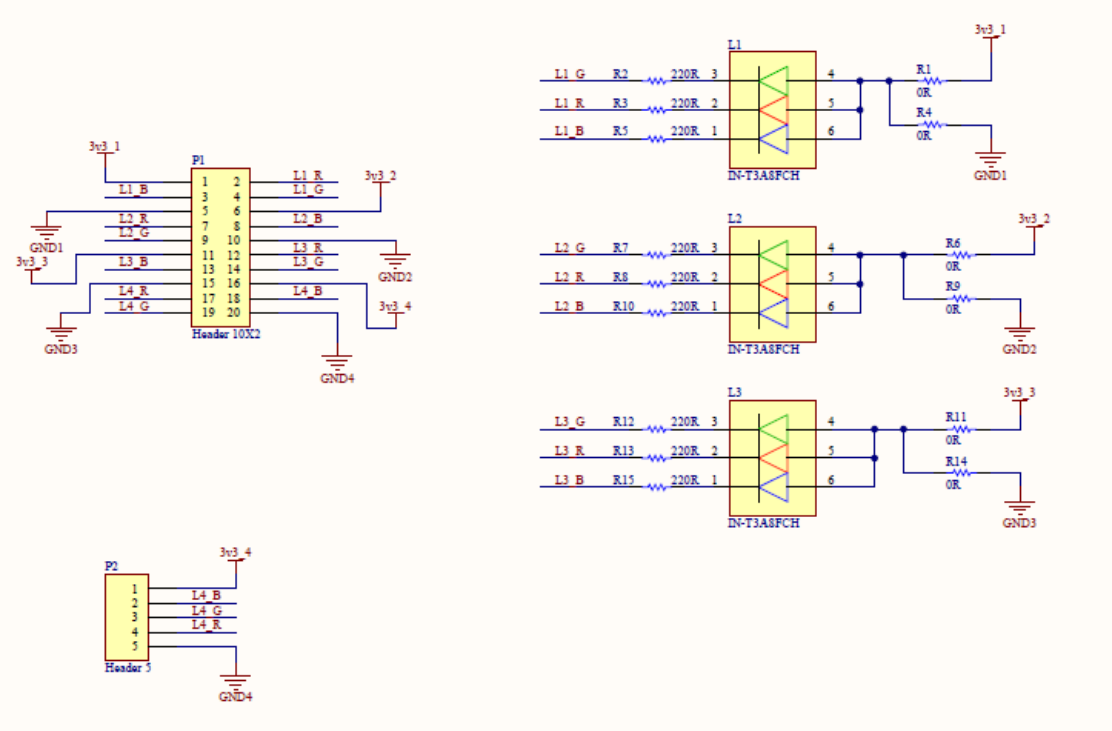

Table 6.74 Board Parts for PCB014

Quantity	Part Description	Part Number	Additional Info
3	IN-T3A8FCH RGB LED	**IN-T3A8FCH**	
1	Header, 10-Pin, Dual Row	**67997-410HLF**	**Header 10X2**
1	Header, 5-Pin	**22232051**	**Header 5**
3	Resistor	**RC0603JR-070RL**	**0R**
3	Resistor	**RC0603JR-070RL**	**0R**
9	Resistor	**RC0603JR-07220RL**	**220R**

Figure 6.30 PCB015 All Layers

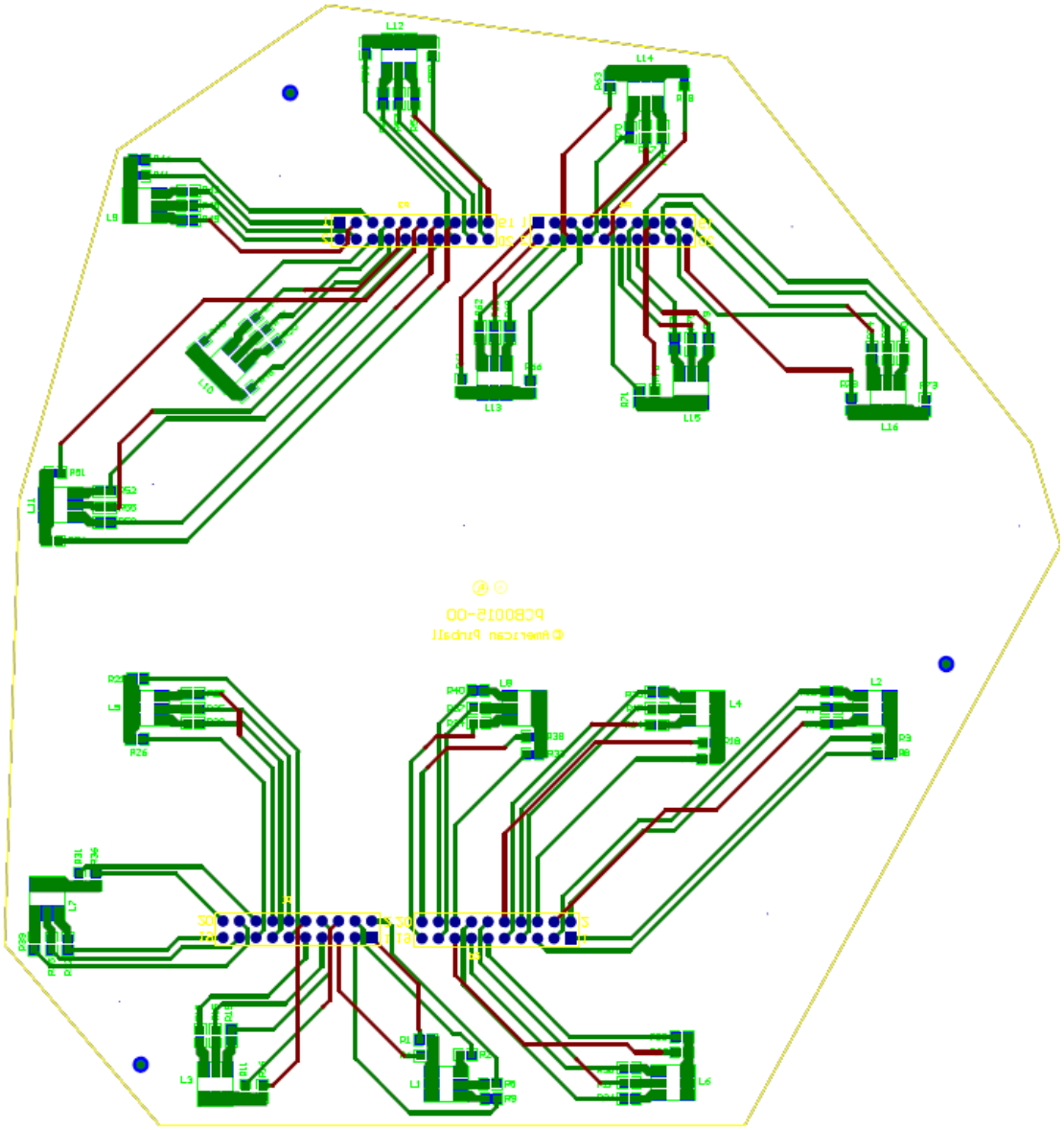

Figure 6.31 PCB015 Bottom View

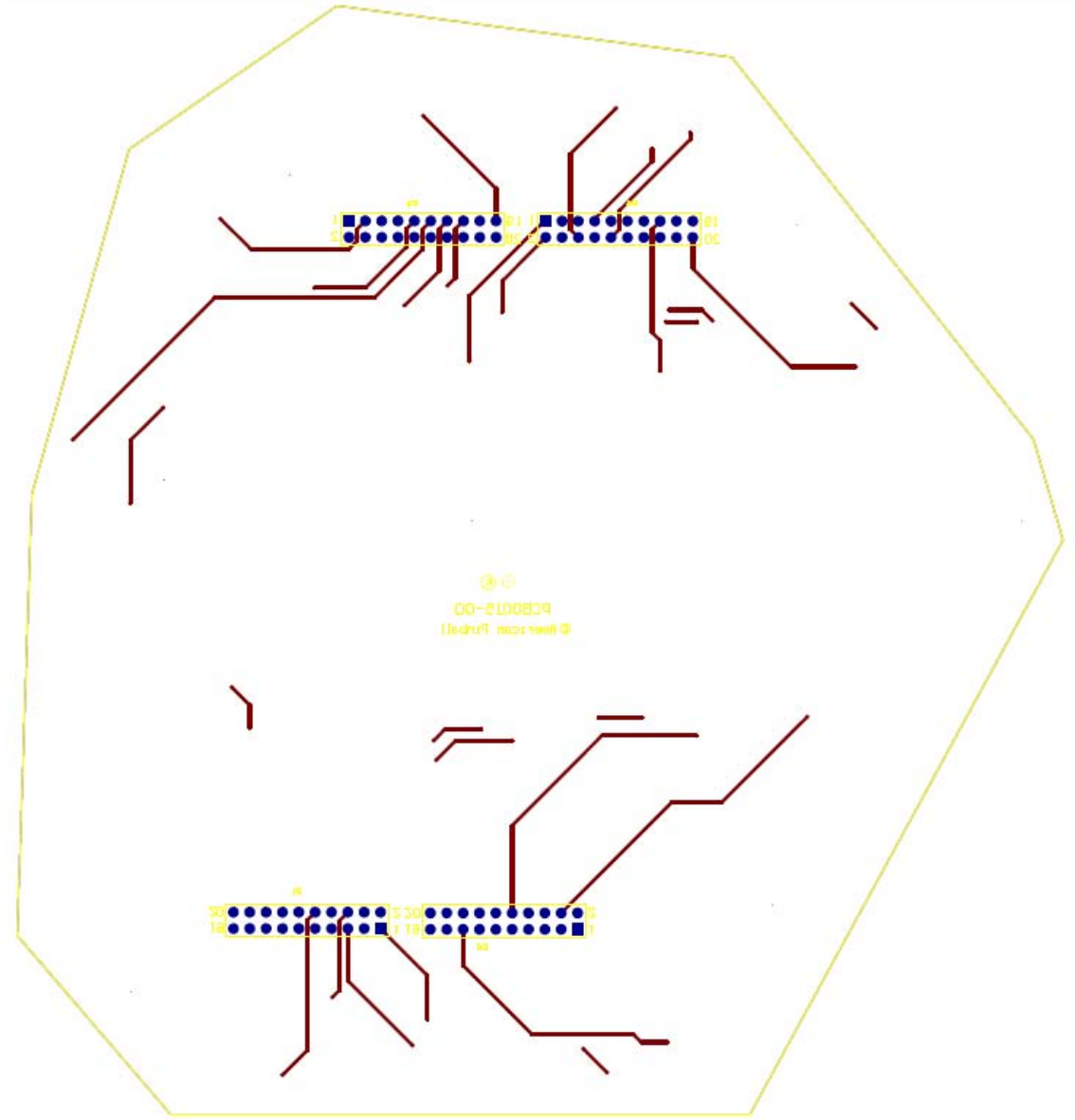

Figure 6.32 PCB015 Top View

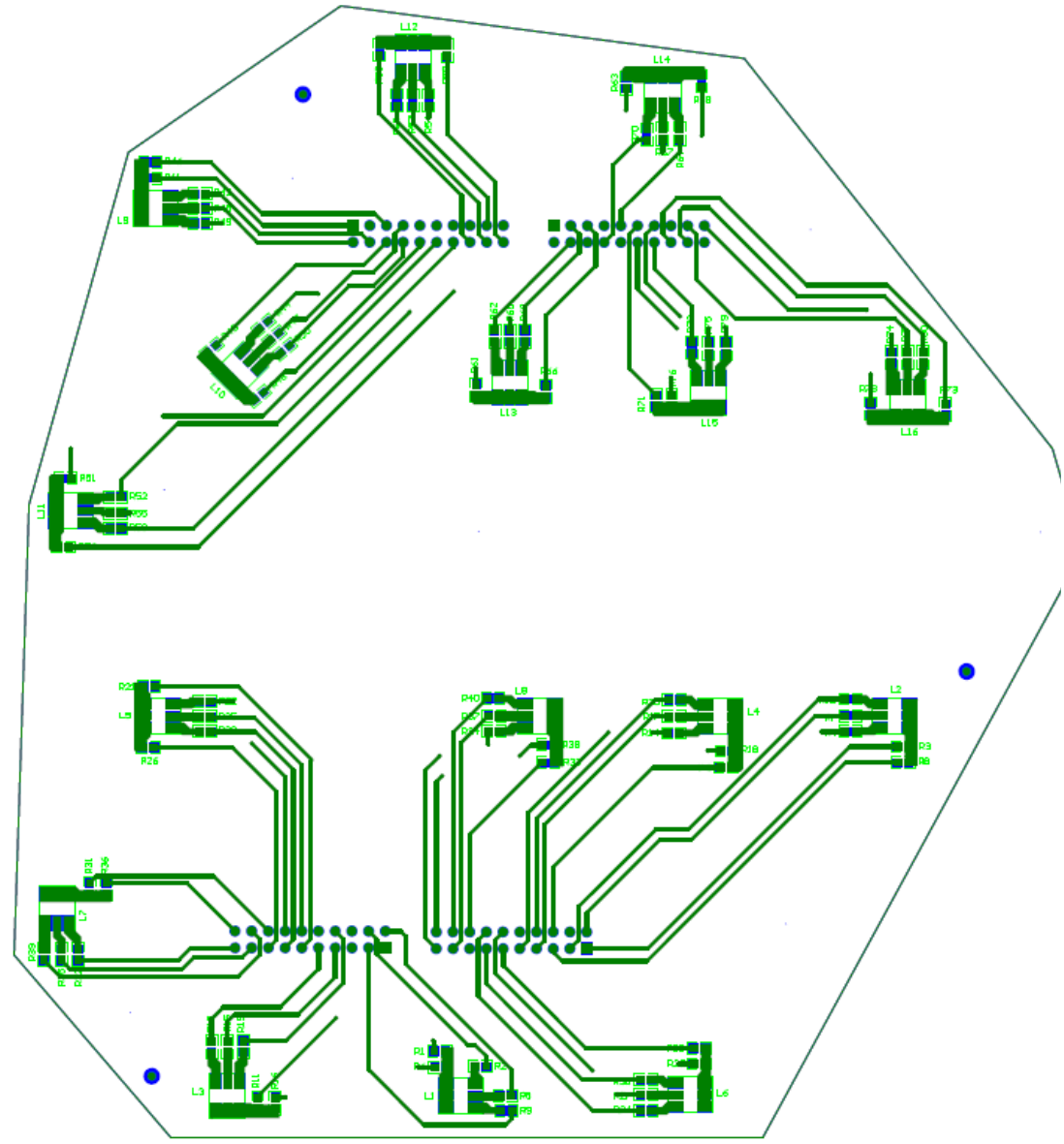

Figure 6.33 PCB015 Schematic

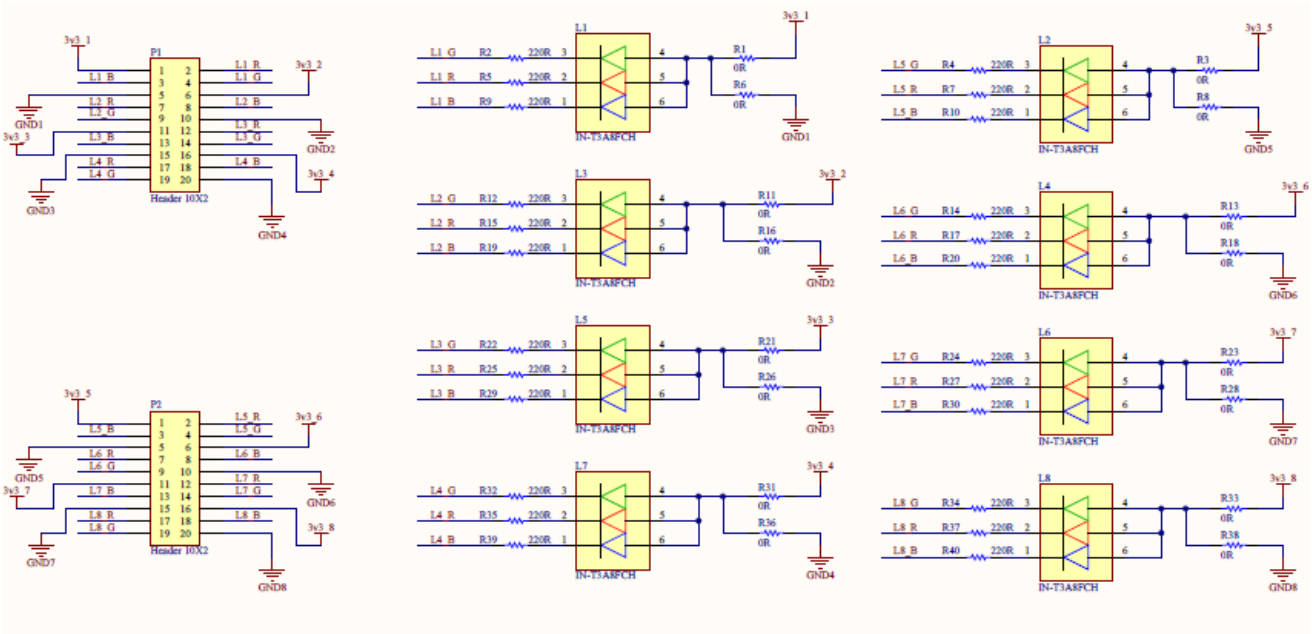

Figure 6.34 PCB016 All Layers

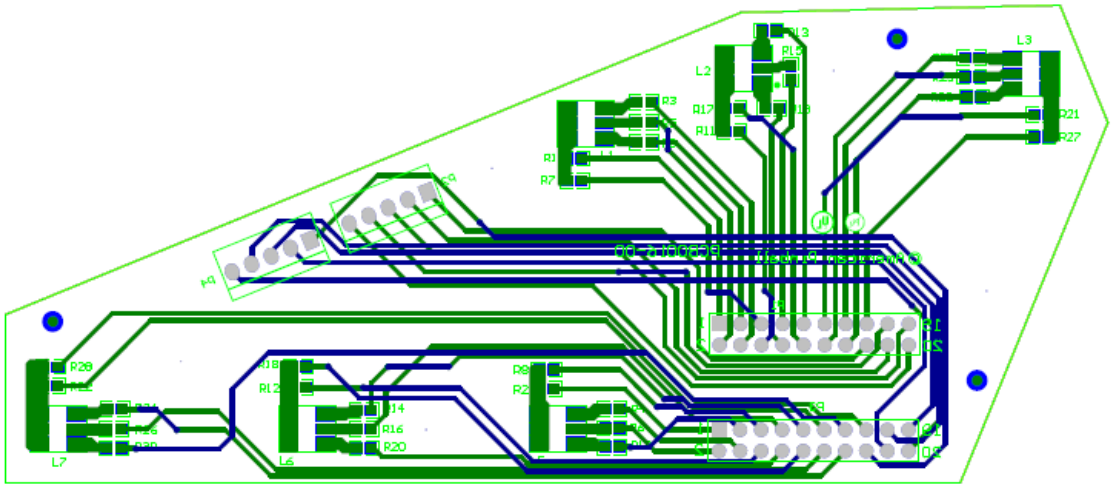

Figure 6.35 PCB016 Bottom View

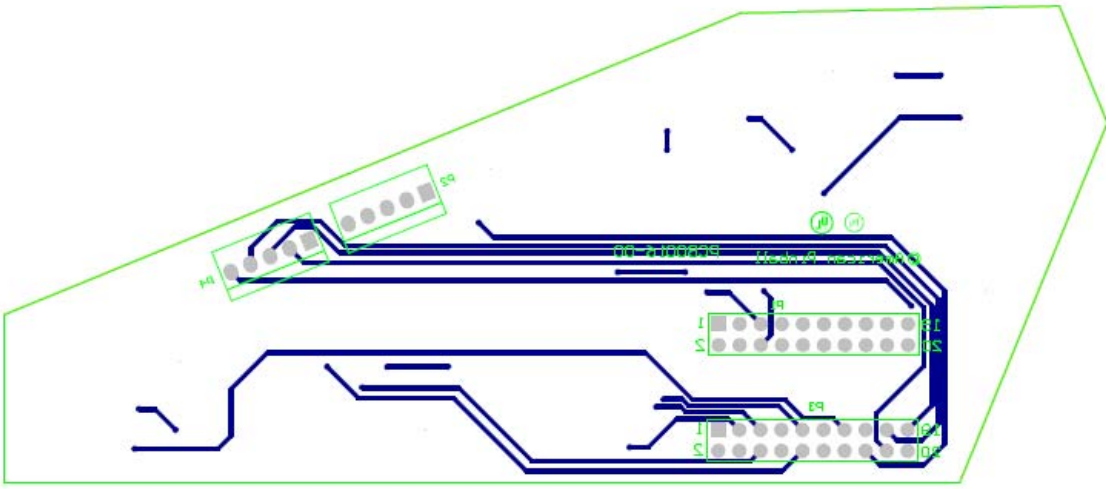

Figure 6.36 PCB016 Top View

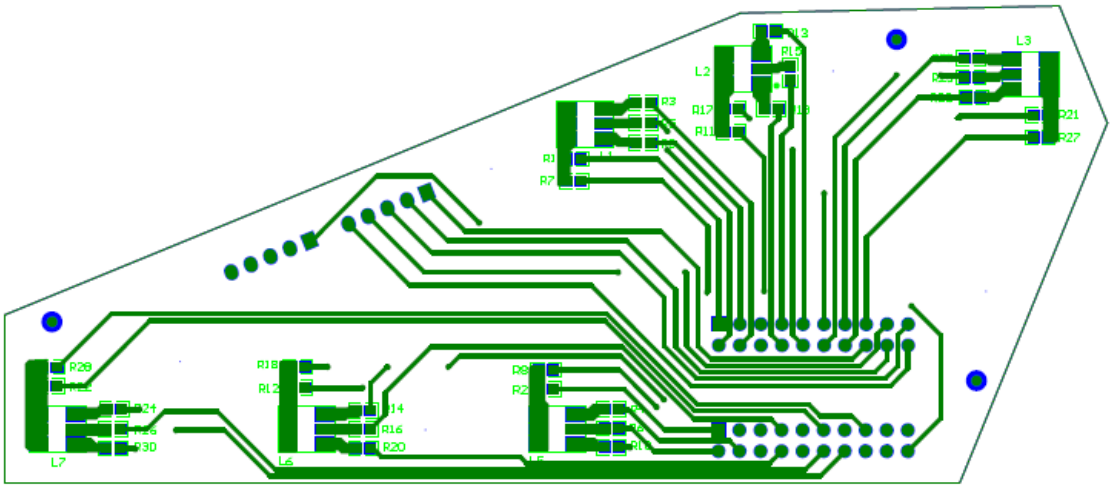

Figure 6.37 PCB016 Schematic

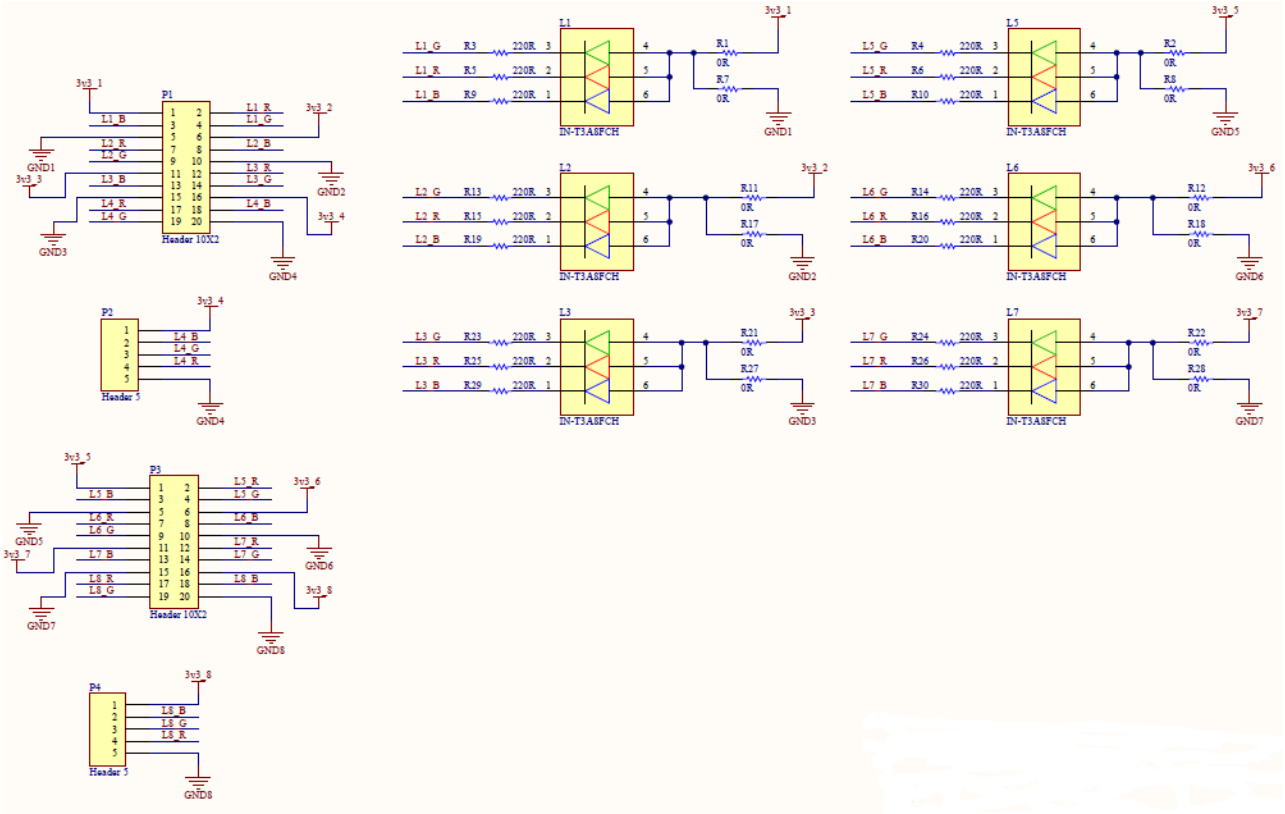

Table 6.75 Board Parts for PCB016

Quantity	Part Description	Part Number	Additional Info
6	IN-T3A8FCH RGB LED	**IN-T3A8FCH**	
2	Header, 10-Pin, Dual Row	**67997-410HLF**	**Header 10X2**
2	Header, 5-Pin	**22232051**	**Header 5**
6	Resistor	**RC0603JR-070RL**	**0R**
6	Resistor	**RC0603JR-070RL**	**0R**
16	Resistor	**RC0603JR-07220RL**	**220R**

Figure 6.38 PCB0019 Rev 00 Ball Trough Receiver Drawing

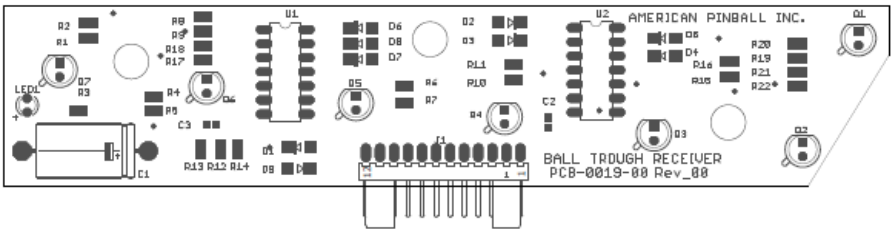

Figure 6.39 PCB0019 Rev 00 Ball Trough Receiver Drawing v2

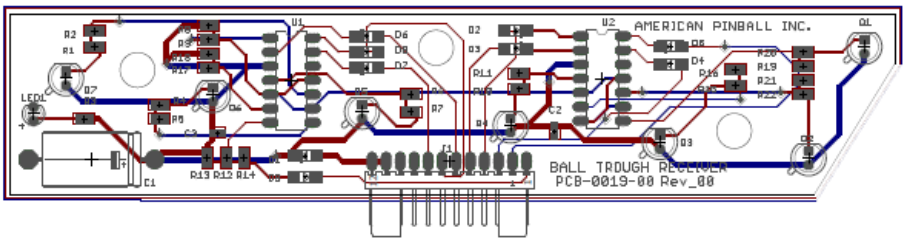

Figure 6.40 PCB0019 Rev 00 Schematic

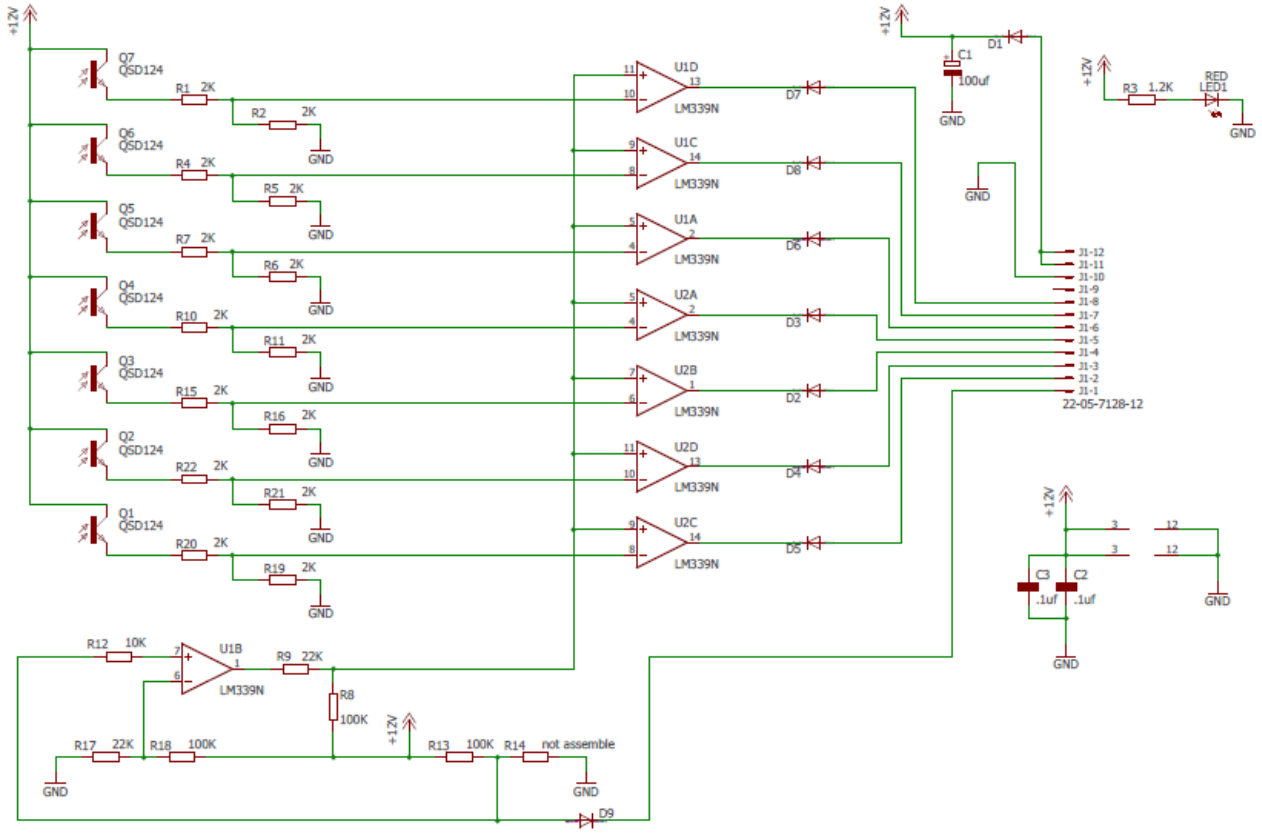

Table 6.76 Board Parts for PCB0019 Rev 00

Quantity	Part Description	Part Number	Additional Info
1	Header, 12-Pin, 2.54mm	22057128	Header 1X2
2	Resistor 0.5 W 22KOhm	CRCW080522K0JNEAHP	22KΩ 5% 805 thick film
1	Resistor 0.5W 10K Ohm	CRCW080510K0JNEAHP	10KΩ 5% 805 thick film
14	Resistor 0.5W 2K Ohm	CRCW08052K00FKEAHP	2KΩ, 805 thick film
3	Resistor 0.5W 100K	CRCW0805100KFKEAHP	100kΩ, 805 thick film
1	Resistor 0.5W 1.2K	CRCW08051K20JNEAHP	1.2KΩ, 805 thick film
2	Capacitor 0.1uF	CC0603ZRY5V9BB104	0.1 uF 603, 50V rated
1	Capacitor 100Uf	TVX1H101MAD1LS	100uf 20%, 50V axial

Quantity	Part Description	Part Number	Additional Info
2	Diff Comparator IC	LM339N	IC, axial 14 DIP
7	Phototransistor IR 880NM 5MM	QSD124A4R0	Infrared sensor
1	Red LED 5V	SSL-LX3044ID-5V	Standard LEDs - 3mm
1	Resistor - Do not connect	N/A	DNC
7	Diode Vr 400V	S1G	Diode Vr 400V

Figure 6.41 PCB019-01 Rev 00 Ball Trough Transmitter Drawing

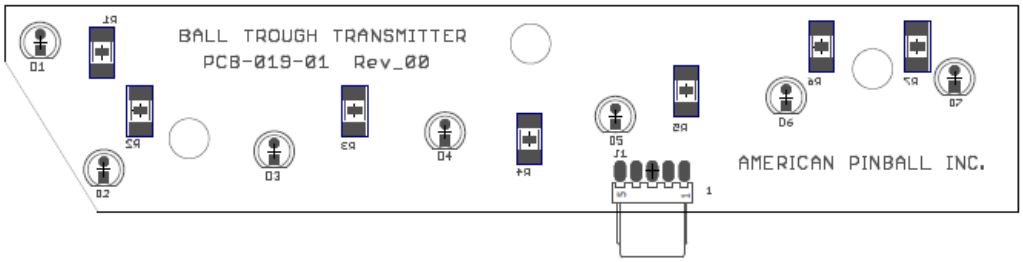

Figure 6.42 PCB019-01 Rev 00 Ball Trough Transmitter Drawing v2

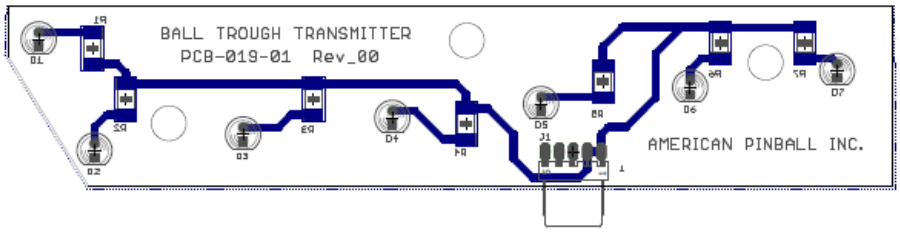

Figure 6.43 PCB019-01 Rev 00 Schematic

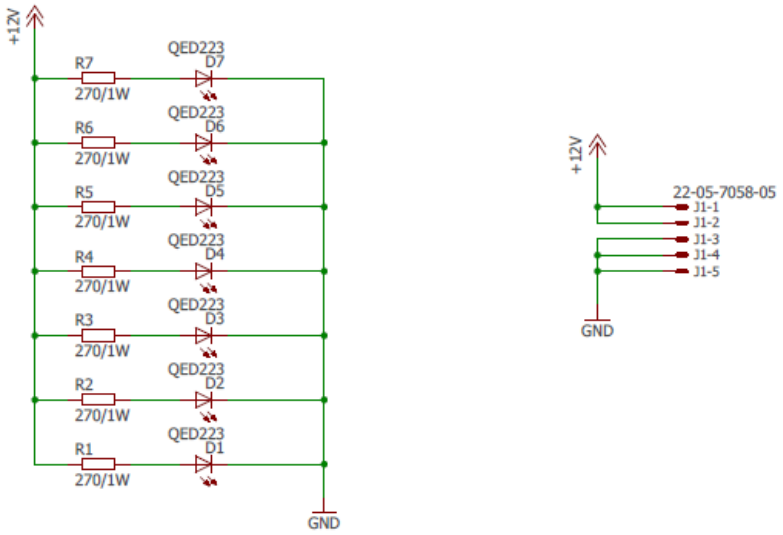

Table 6.77 Board Parts for PCB019-01 Rev 00

Quantity	Part Description	Part Number	Additional Info
1	Header, 5-Pin, Right Angle Tin	22057058	Header 5 pos 2.54mm
7	EMITTER IR 880NM 100MA RADIAL	QED223A4R0	Infrared LED
7	Resistor 1% 2 W 270 Ohm	3521270RFT	270Ω, 2512 package

Figure 6.44 PCB0020 Rev 01 Opto Interface Board v1

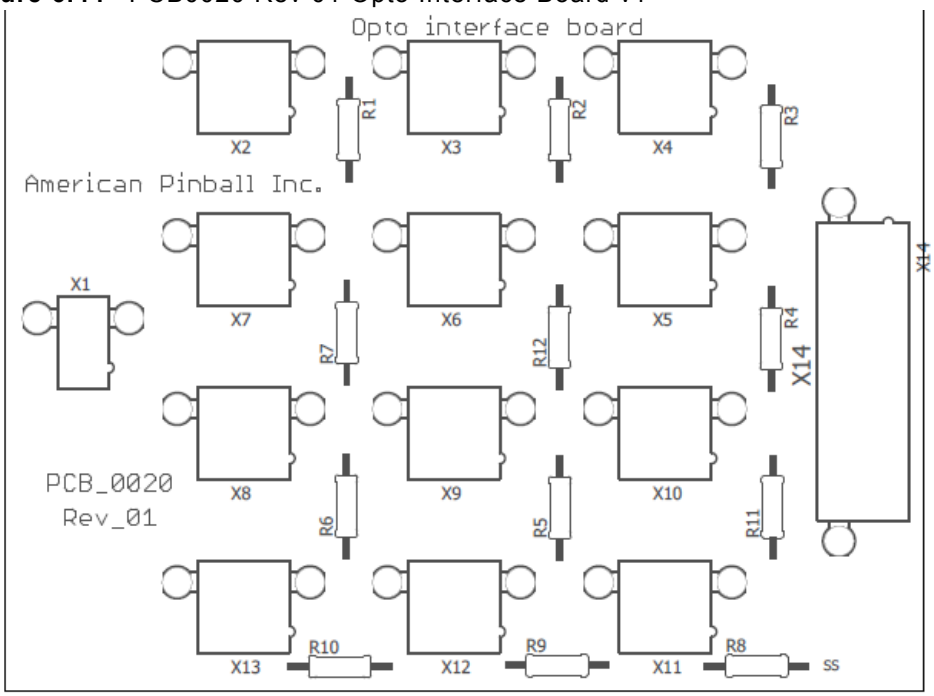

Figure 6.45 PCB0020 Rev 01 Opto Interface Board v2

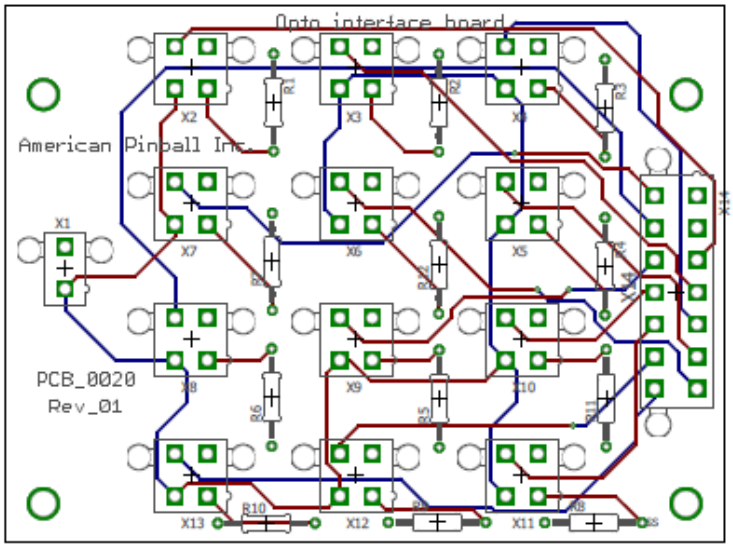

Figure 6.46 PCB0020 Rev 01 Schematic

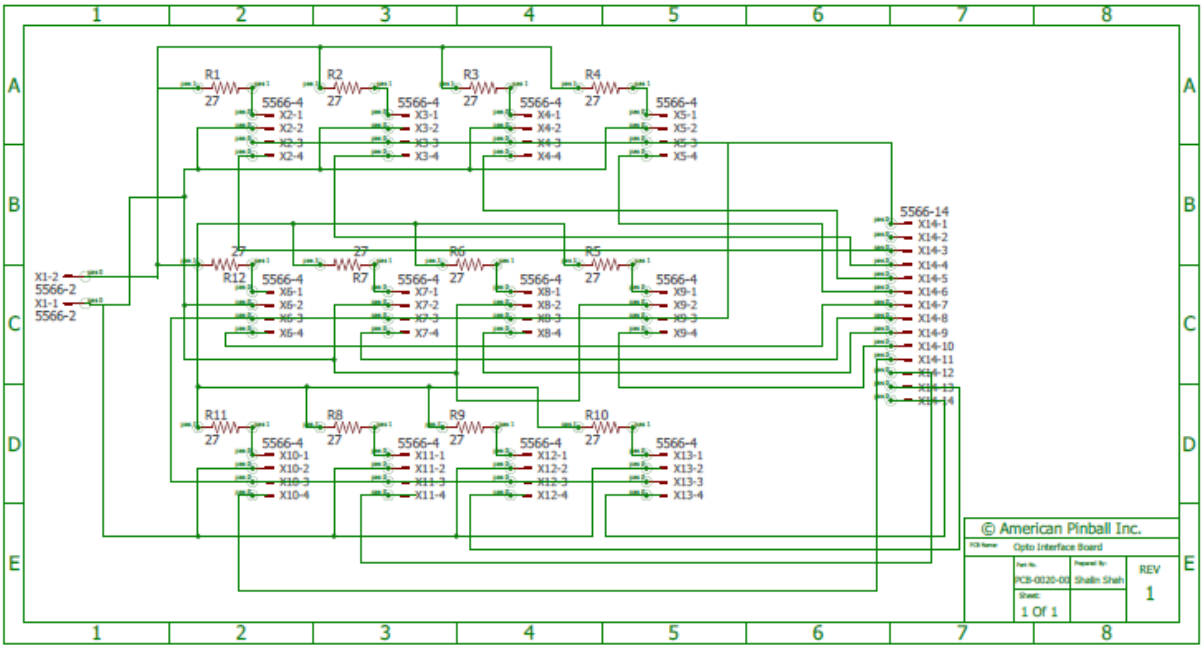

Table 6.78 Board Parts for PCB0020 Rev 01

Quantity	Part Description	Part Number	Additional Info
1	Header, 2-Pin, Dual row	39281023	Header 1X2
12	Header 4 pin, Dual row	39299042	Header 4X2
1	Header 14 pin, Dual row	39281143	Header 7X2
12	'Resistor 1W 27 Ohm	PPC27W-1TR-ND/ RSMF1JT27R0	27Ω Resistor

Figure 6.47 PCB0021 Add On Driver Board v1

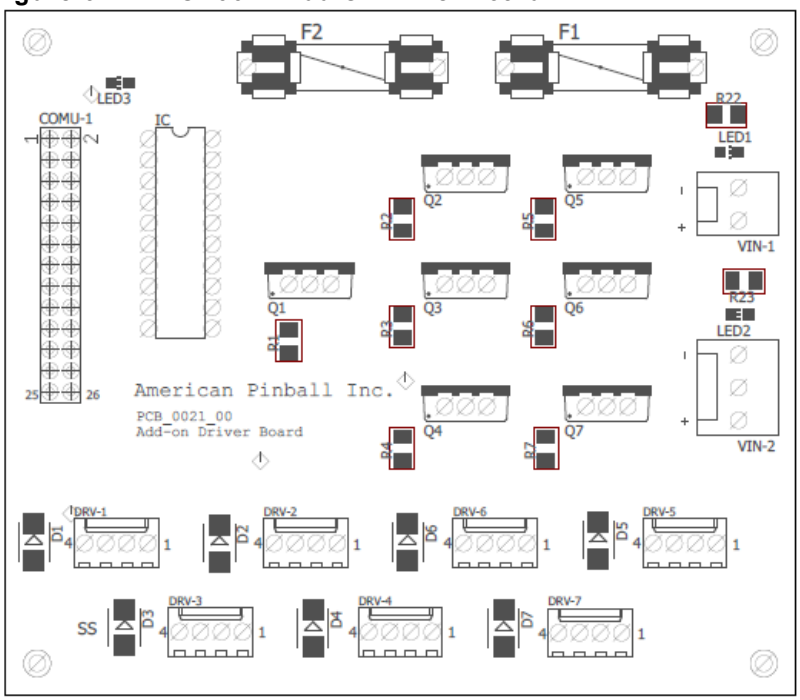

Figure 6.48 PCB0021 Add On Driver Board v2

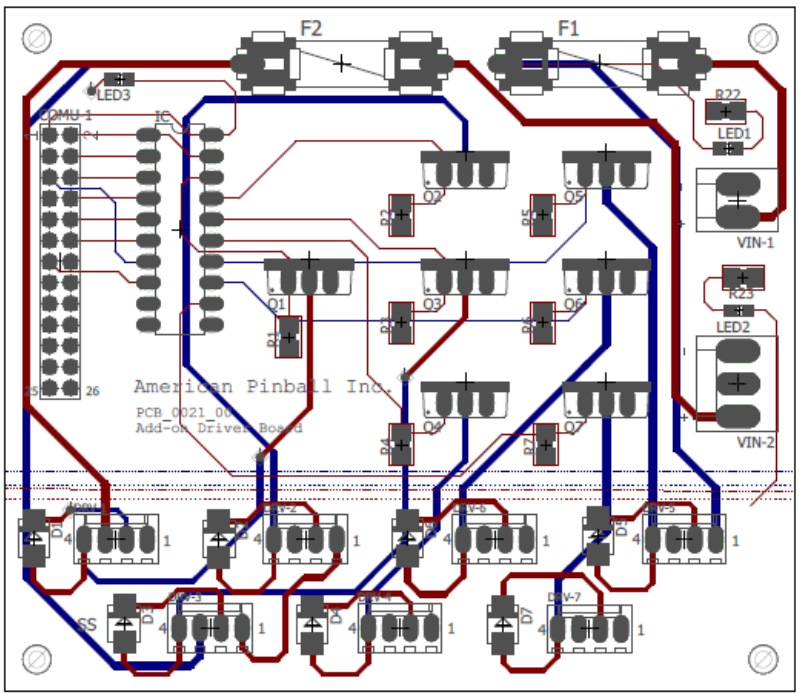

Figure 6.49 PCB0021 Schematic

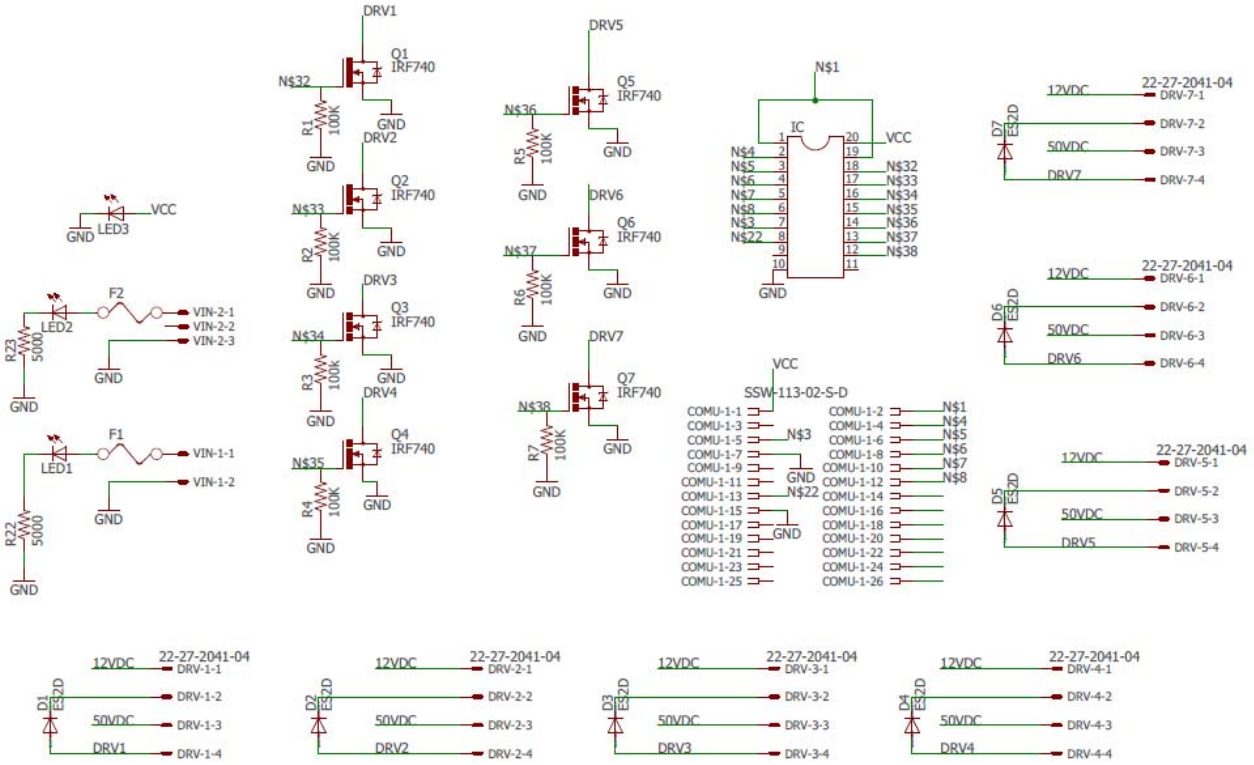

Table 6.79 Board Parts Number for PCB0021

Quantity	Part Description	Part Number	Additional Info
7	Diode DO-214AA/SMB	S1GB-13	Standard Diode Vr=400V
7	Connector 4 Pos 0.100 vert	22232041	Connector KK Series
1	IC DIP/DIL20	CD74HC541E	IC Buffer 8 bit DIP
7	Res 100K ohm M1206	RC1206JR-07100KL	Standard Diode Vr=400V
6	N-CH 100V 36A TO-220AB	IRL540NPBF	N-channel MOSFT
2	Res 5K ohm M1206	CRCW12065K10JNEAHP	Resistor 1W
2	KK .156 header 2 Pos	26624020	Connector KK Series
2	KK .156 header 3 Pos	26624030	Connector KK Series
2	RedLED 0805	LTST-S220KRKT	Red 631nm LED Indication

Quantity	Part Description	Part Number	Additional Info
1	Blue LED 0805	LTST-C170TBKT	Blue 470nm LED Indication
2	FUSE HLDR CARTRIDGE 5*20 mm	4628	Fuse Bracket
1	Header Cuttalbe 0.100 (2.54)	M20-9990345	.100 Male Pins 26 POS

Figure 6.50 PCB0022 Layout

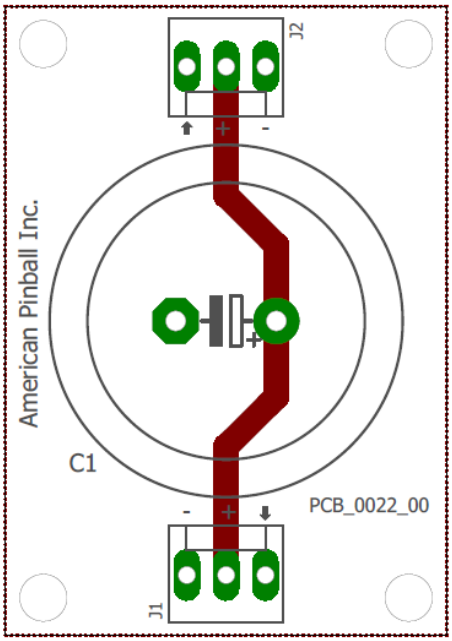

Figure 6.51 PCB0022 Schematic

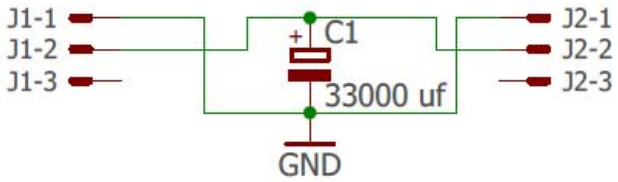

Table 6.80 Board Parts Number for PCB0022

Quantity	Part Description	Part Number	Additional Info
2	KK .156 Header 3 Pos	0009652038	Connector KK series
1	Cap Alum 33000UF 20% 25V Snap	LLS1E333MELC	Capacitor 25V

ASSEMBLIES, POSTS & RING LOCATIONS

7

ASSEMBLIES

Please refer to the following chapter for assemblies, part numbers, and descriptions that will support the maintenance of your Houdini pinball machine.

3 BALL LOCK ASSEMBLY

Figure 7.1 3 Ball Lock Assembly Drawing

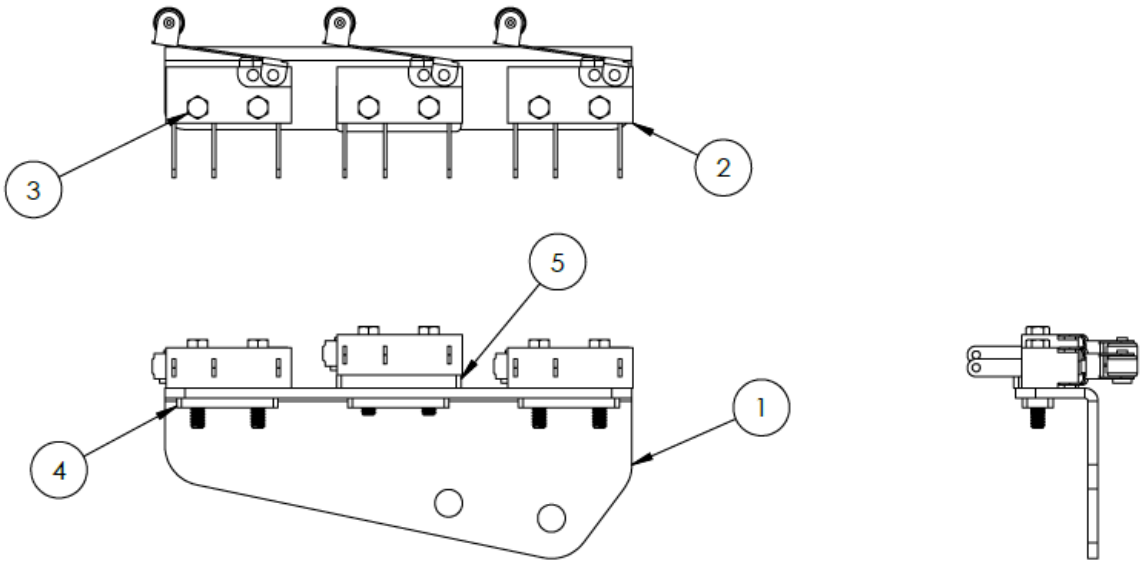

Figure 7.2 3 Ball Lock Assembly Drawing

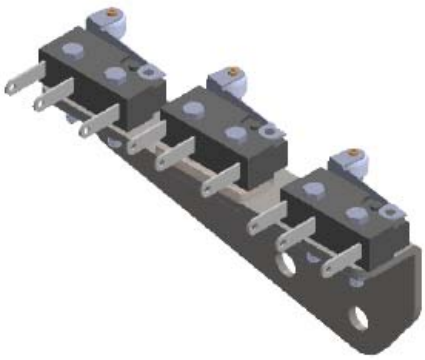

Table 7.1 Parts for 3 Ball Lock Assembly

Item No.	Quantity	Part Description	Part Number
1	1	3-Ball Switch Bracket	MTL-0012-00
2	3	Roller Ball Switch	SWI0016-00
3	6	2-56 X 1/2: HWH MS Black	MAS2002-08

Item No.	Quantity	Part Description	Part Number
4	3	2-56 Nut Plate	MTL0068-00
5	1	3-Ball Switch Spacer	PLS0001-31

3 BALL UNDER TROUGH ASSEMBLY

Figure 7.3 3 Ball Under Trough Assembly Drawing

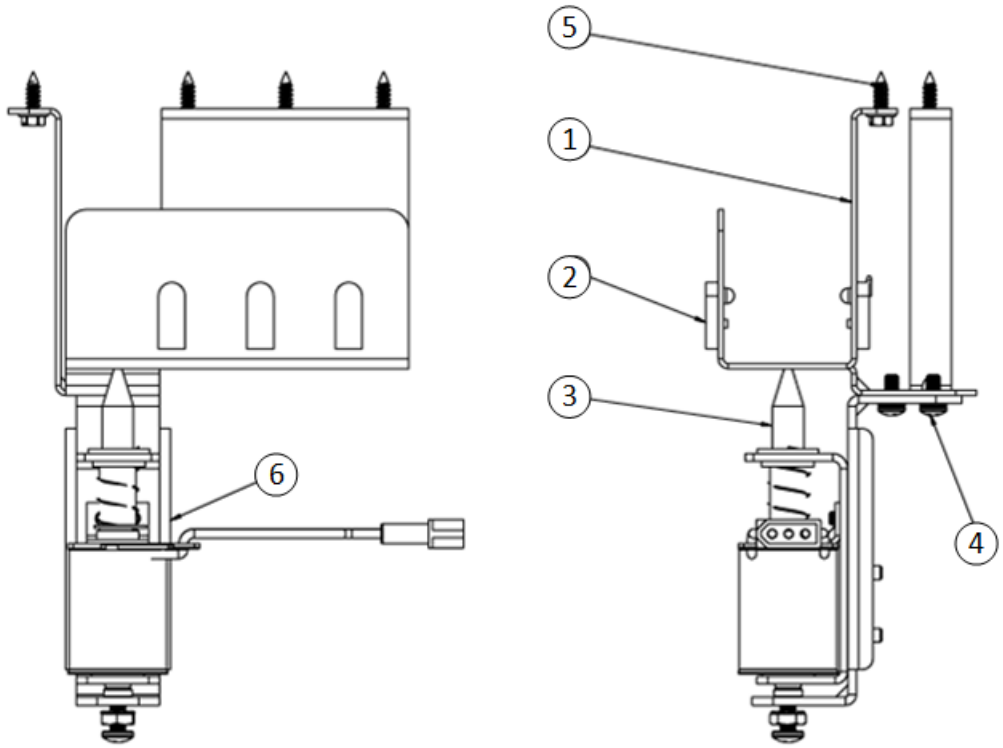

Figure 7.4 3 Ball Under Trough Assembly Drawing

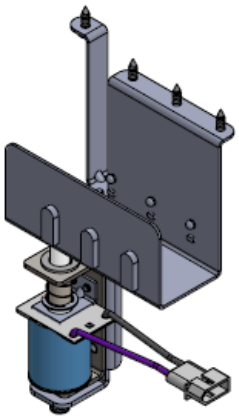

Table 7.2 Parts for 3 Ball Under Trough Assembly

Item No.	Quantity	Part Description	Part Number
1	1	Undertrough Bracket	SUB0005-00
2	3	Optek Infrared LED Assy	WCA0016-00
3	1	Adjustable Down Post Assembly	ASM0017-00
4	4	8-32 X 3/8 PPH SEMS MS Zinc	MAS1008-06
5	4	#8 X 1/2” HWH SMS Zinc	SMS2008-08

6 BALL UNDER TROUGH ASSEMBLY

Figure 7.5 6 Ball Under Trough Assembly Drawing

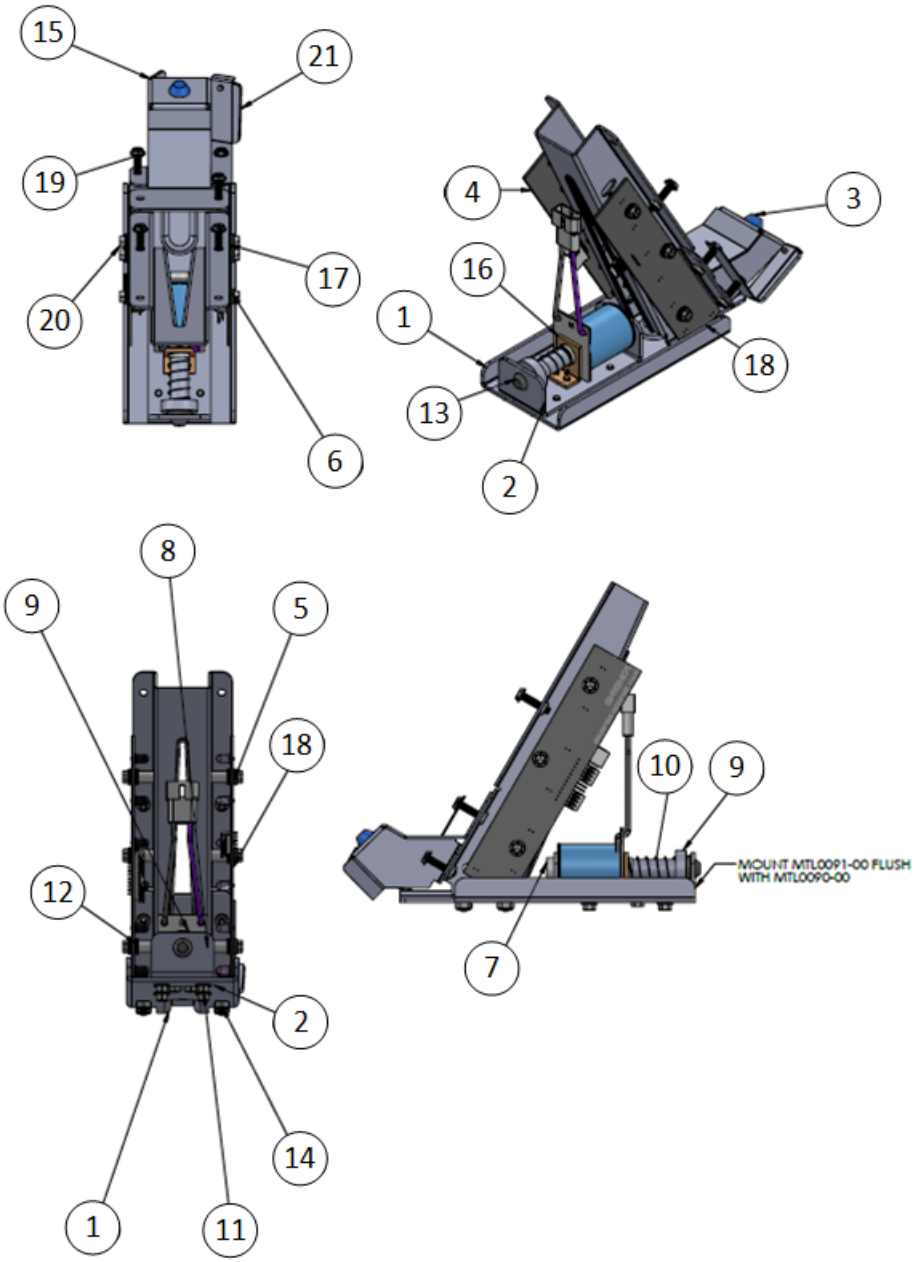

Table 7.3 Parts for 6 Ball Under Trough Assembly

Item No.	Quantity	Part Description	Part Number
1	1	Ball Trough Front Bracket	MTL0090-00
2	1	Coil Mounting Bracket	MTL001-00

Item No.	Quantity	Part Description	Part Number
3	1	Trough Bumper Plug	RBR0014-00
4	1	Ball Trough Receiver Board	PCB-0019-00
5	6	Rubber Grommet	RBR0015-00
6	1	Ball Trough Bushing	94-3002-00
7	1	Coil Sleeve	PLS0038-00
8	1	23-800 Lugless Coil	CL0001-01
9	1	Ball Trough Plunger	PGR0009-00
10	1	Ball Trough Spring	SPR0005-00
11	6	8/32 x 1/4” HWH MS Zinc	MAS2008-04
12	6	#6 Flat Washer	WAS0006-00
13	1	Plug Bumper	RBR0011-00
14	4	8/32 Nylon Locknut Low Profile	NUT0008-00
15	1	Ball Trough Welded Assembly	MTL0089-00
16	1	VUK Coil Retaining Bracket	MTL0082-00
17	5	Ball Trough Bushing	MCH0016-00
18	1	Ball Trough Transmitter Board	PCB0019-01
19	5	8/32 x 3/4” HWH SMS Zinc	MAS2008-08
20	6	6/32 X 5/8” HWH MS Zinc	MAS2006-10
21	1	Ball Stop Bracket	MTL0093-00

ADJ DOWN POST

Figure 7.6 Adj Down Post Assembly

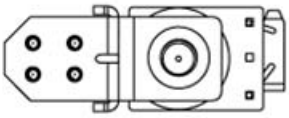

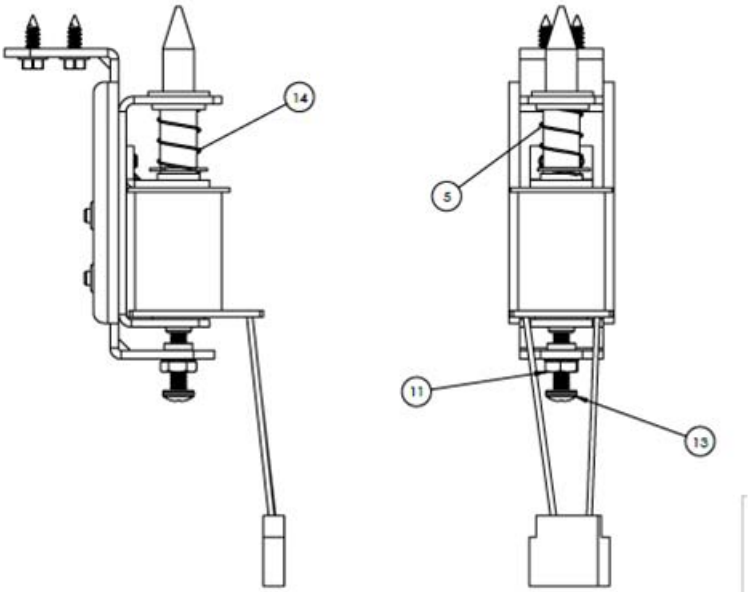

Figure 7.7 Adj Down Post Assembly Drawing

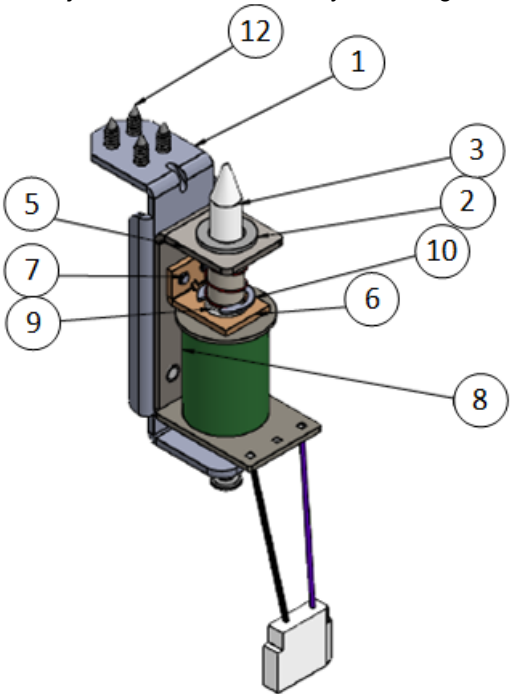

Table 7.4 Parts for Adj Down Post Assembly

Item No.	Quantity	Part Description	Part Number
1	1	Downpost Mounting Bracket	MTL0044-00
2	1	Nyliner 7/16”	PLS0028-00
3	1	Down Post Plunger Assembly	PGR003-00
4	3	8/32 Nylon Lockout Nut Low Profile	NUT0008-00
5	1	Down Post Coil Bracket	MTL0043-00
6	1	VUK Coil Retaining Bracket	MTL0082-00
7	2	8/32 x 1/4” SEMS MS Zinc	MAS1008-04
8	1	23-800 Lugless Coil	COI0001-01
9	1	Coil Sleeve 1-3/4” X 1/2” NO Flange	PLS0035-00
10	1	7/16” E-Ring	SPC0003-07
11	1	10/32 KEPS Nut	NUT1010-00
12	4	#8 X 1/2” HWH SMS Zinc	SMS2008-08
13	1	10/32 X 3/4” PPH MS Zinc	MAS0010-12
14	1	VUK Spring	SPR0001-00

ADJ DOWN POST 2

Figure 7.8 Adj Down Post 2 Assembly

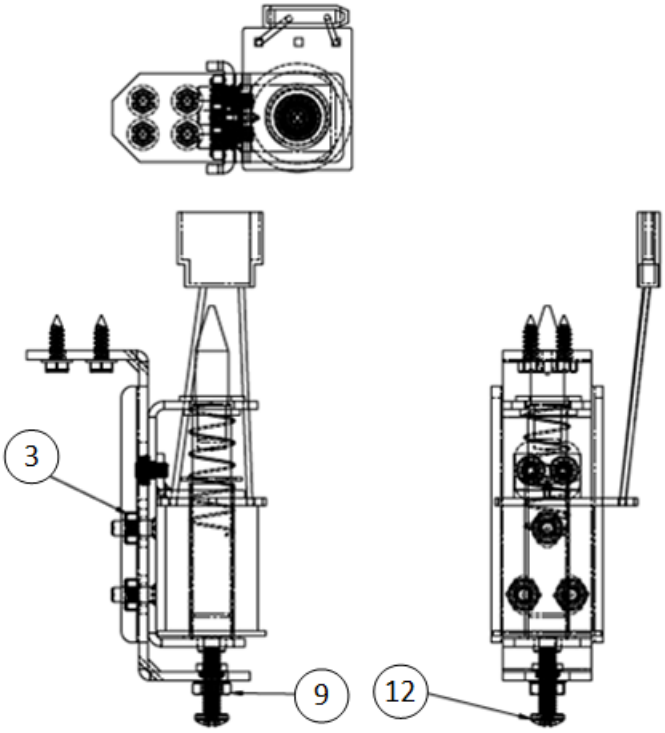

Figure 7.9 Adj Down Post 2 Assembly Drawing

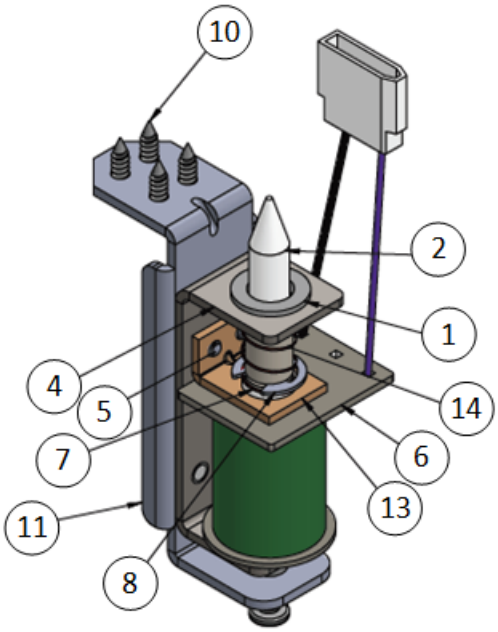

Table 7.5 Parts for Adj Down Post 2 Assembly

Item No.	Quantity	Part Description	Part Number
1	1	Nyliner 7/16”	PLS0028-00
2	1	Down Post Plunger Assembly	PGR003-00
3	3	8/32 Lock Nylon Nut	NUT0008-00
4	1	Down Post Coil Bracket	MTL0043-00
5	2	8/32 X 1/4” SEMS MS Zinc	MAS1008-04
6	1	23-800 Lugless Coil	COI0001-01
7	1	Coil Sleeve 1-3/4” X 1/2” NO Flange	PLS003500
8	1	7/16” E-Ring	SPC0003-07
9	1	10/32 KEPS Nut	NUT1010-00
10	4	#8 X 1/2” HWH SMS Zinc	SMS2008-08
11	1	Downpost Mounting Bracket	MTL0044-00
12	1	10/32 X 3/4” PPH MS Zinc	MAS0010-12
13	1	VUK Coil Retaining Bracket	MTL0082-00
14	1	VUK Spring	SPR0001-00

ADJ UP POST

Figure 7.10 Adj Up Post Assembly

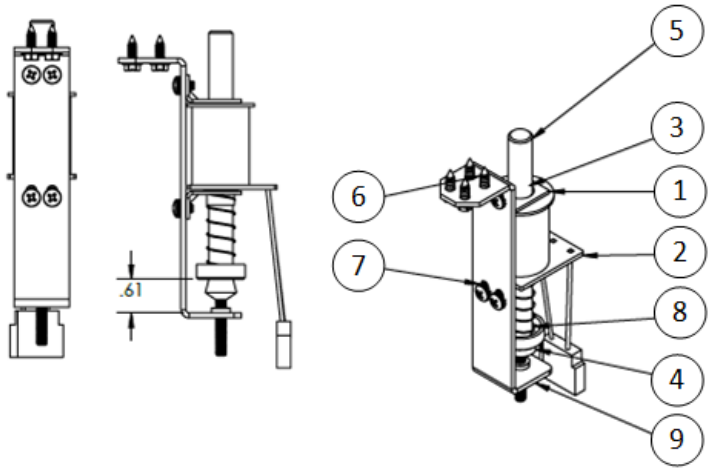

Figure 7.11 Adj Up Post Assembly Drawing

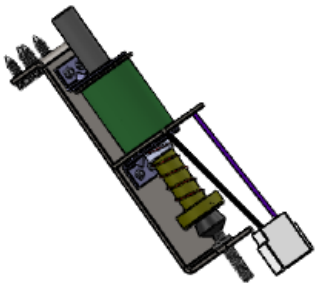

Table 7.6 Parts for Adj Up Post Assembly

Item No.	Quantity	Part Description	Part Number
1	2	8-32 Tapped Standard Coil Mounting Bracket	MTL0082-00
2	1	23-800 Lugless Coil	COI0001-01
3	1	Coil Sleeve 1-7/8” With 1/4” Flange	PLS0019-00
4	1	Spindle Stop	SPC0004-00
5		Up Post Plunger	PGR0002-00
6	4	#8 X 1/2” HWH SMS Zinc	SMS2008-08
7	4	8-32 X 1/4” SEMS MS Zinc	MAS1008-04
8	1	Slingshot Spring	SPR0002-00
9	1	Up Post Bracket	MTL0031-00

BACK BOX ASSEMBLY

Figure 7.12 Back Box Assembly - Detailed

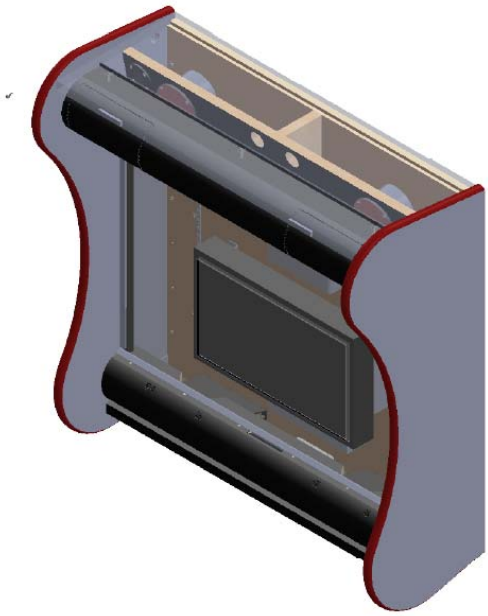

Figure 7.13 Back Box Assembly

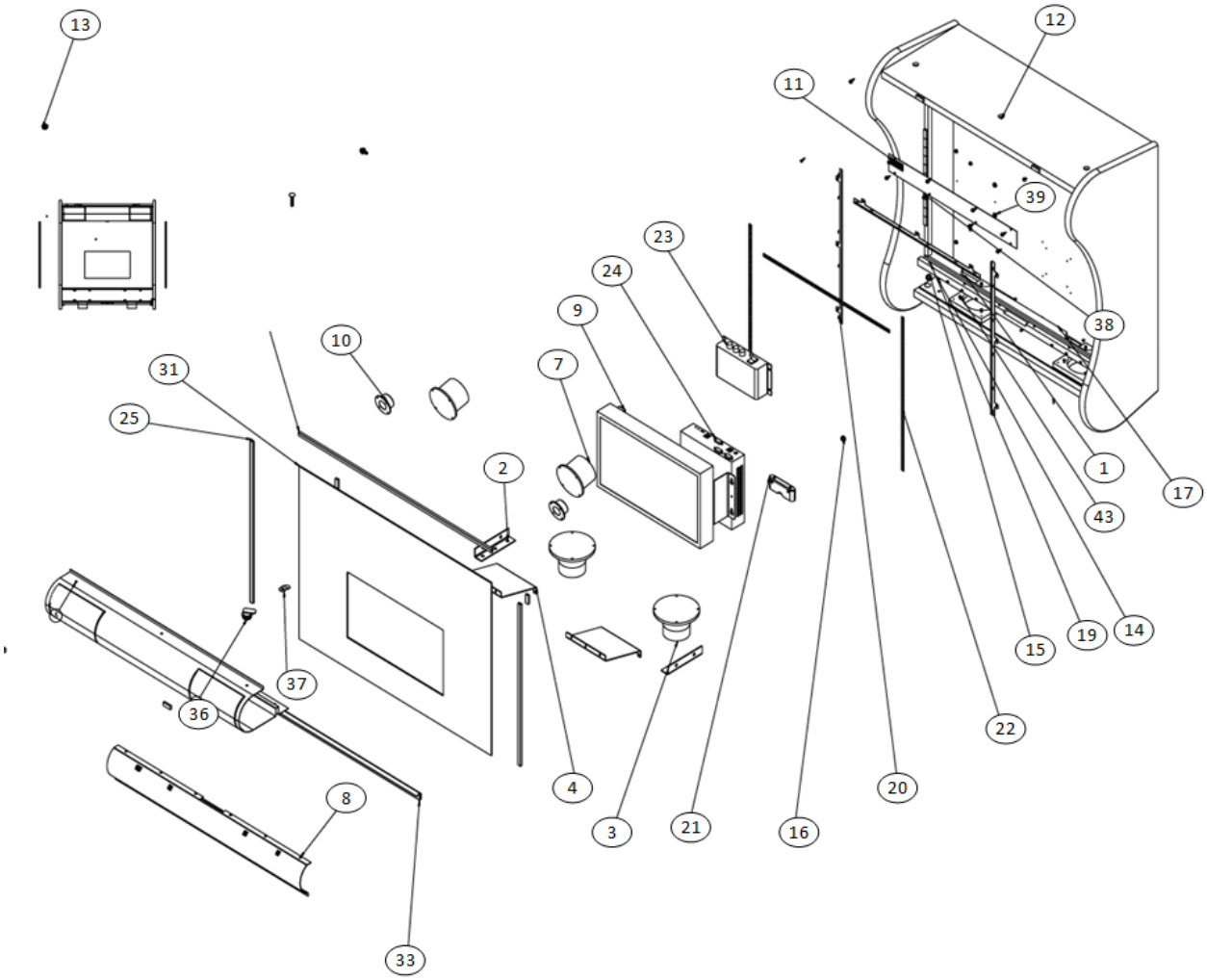

Table 7.7 Parts for Back Box Assembly

Item No.	Quantity	Part Description	Part Number
1	1	Houdini Screened Backbox	WOD0003-00A
2	2	Lower Backbox Corner Bracket	MTL0030-00
3	2	Speaker - 4” Midbass	ELE005-00
4	2	Reflective Audio Plate	PLS0001-17
5		Backbox Speaker Grill (Top)	MTL0001-00A
6	29	#8 X 1/2” HWH SMS Zinc	SMS2008-08
7	2	Speaker - 3” Midbass	ELE004-00
8	2	Backbox Speaker Grill (Bottom)	MTL0002-00B
9	1	15.6 Monitor Assembly	MASM0026-00

Item No.	Quantity	Part Description	Part Number
10	2	Speaker - 2” Tweeter	ELE0003-00
11	1	Vent Grill Universal	MTL0094-00
12	3	8-32 x 3/4” Tamper Proof T-15 MS - Black	MAS8108-12
13	6	1/4-20 Flange Nut	NUT5025-00
14	6	1/4-20 x 1-1/4: BLK Carriage Bolt	BLT5125-20
15	4	1/4-20 x 1/2” HWH MS Zinc	MAS2025-08
16	2	10-24 Flange Nut	NUT5011-00
17	2	10-24 x 1--3/4” BLK Carriage Bolt	BLT5111-20
18	1	#6 x 3/8” PFH SMS type ab - black	SMS6106-06
19	6	#4 x 1/2” PFH SMS type ab - black	SMS6106-05
20	3	LED Strip Bracket	MTL00036-00
21	1	Southco Rotolock Receptacle	PUR0003-01
22	3	Cool White LED Strip	LIT0001-00
23	1	Lepai Amplifier	ELE0014-00
24	1	Motherboard	PCB0001-00
25	2	Backglass Side Channel	PLS0014-01
26	1	Backbox Speaker Cable	WCA0004-00
27	1	Coil Data In Cable	WCA0005-00
28	1	Data Cable Jumper - 2 Board Mtg	WCA0005-01
29	1	Servo Data Cable	WCA0006-00
30	1	Backbox Power Cable	WCA0008-00
31	1	Houdini Screened Backglass 19.92” x 27” x 3/16”	GLS0002-00
32	1	Backglass Top Channel	PLS0014-00
33	1	Backbox Bottom Lift Channel	PLS0015-00
34	1	Backbox Speaker Cable	ELE0010-00
35	1	Backbox Speaker Cable	ELE0011-00
36	1	Backbox Lock Assy	PUR0004-00
37	1	Offset Lock Cam	PUR0006-00
38	28	3/16" X 3/8" Foam - Backglass	MSC0010-00
39	4	10-32 x 1/2" PPH MS Zinc	MAS0010-08
40	1	3 Foot 3.5MM M-M Cable	WIR0003-00
41	1	Split flex tubing - black	WIR0004-00

Item No.	Quantity	Part Description	Part Number
42	1	Ground Braid	WIR0005-00
43	40	#6 x 1/2" PPH MS Zinc	SMS0006-08

BACK PANEL ASSEMBLY

Figure 7.14 Back Panel Assembly

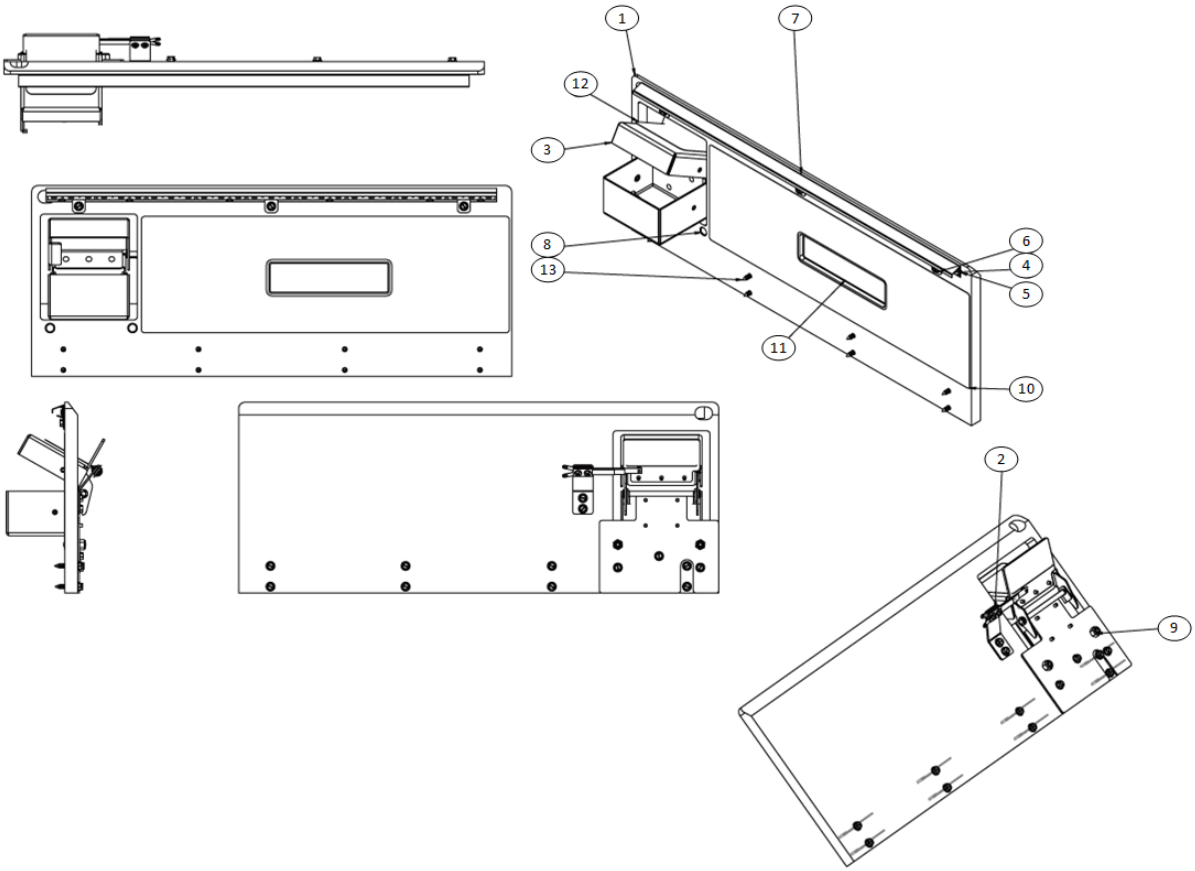

Table 7.8 Parts for Back Panel Assembly

Item No.	Quantity	Part Description	Part Number
1	1	HH Back Panel	WOD0004-00C
2	1	Trunk Switch Assembly	ASM0036-00
3	1	Steam Trunk Assembly	ASM0011-00
4	1	Cool White LED Strip	LIT0001-00

Item No.	Quantity	Part Description	Part Number
5	1	LED Strip Bracket	MTL0036-00
6	8	#8 1/2” HWH SMS Zinc	SMS2008-08
7	1	LED Strip Deflector	MTL0074-00
8	2	8-32 x 3/4” BLK Carriage Bolt	BLT0108-12
9	2	8-32 Nylon Locknut Low Profile	NUT0008-00
10	1	Back Panel Decal	DCL0001-01
11	1	Back Panel Insert	DCL0001-01A
12	1	Trunk Top	DCL0001-09
13	8	#8 x 7/8: HWH SMS Zinc	SMS2008-14

CATAPULT ASSEMBLY

Figure 7.15 Catapult Assembly - Detailed

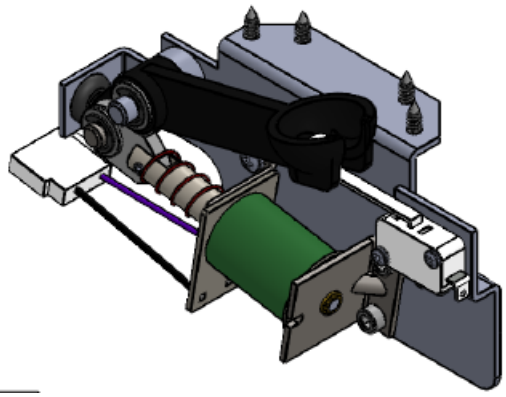

Figure 7.16 Catapult Assembly

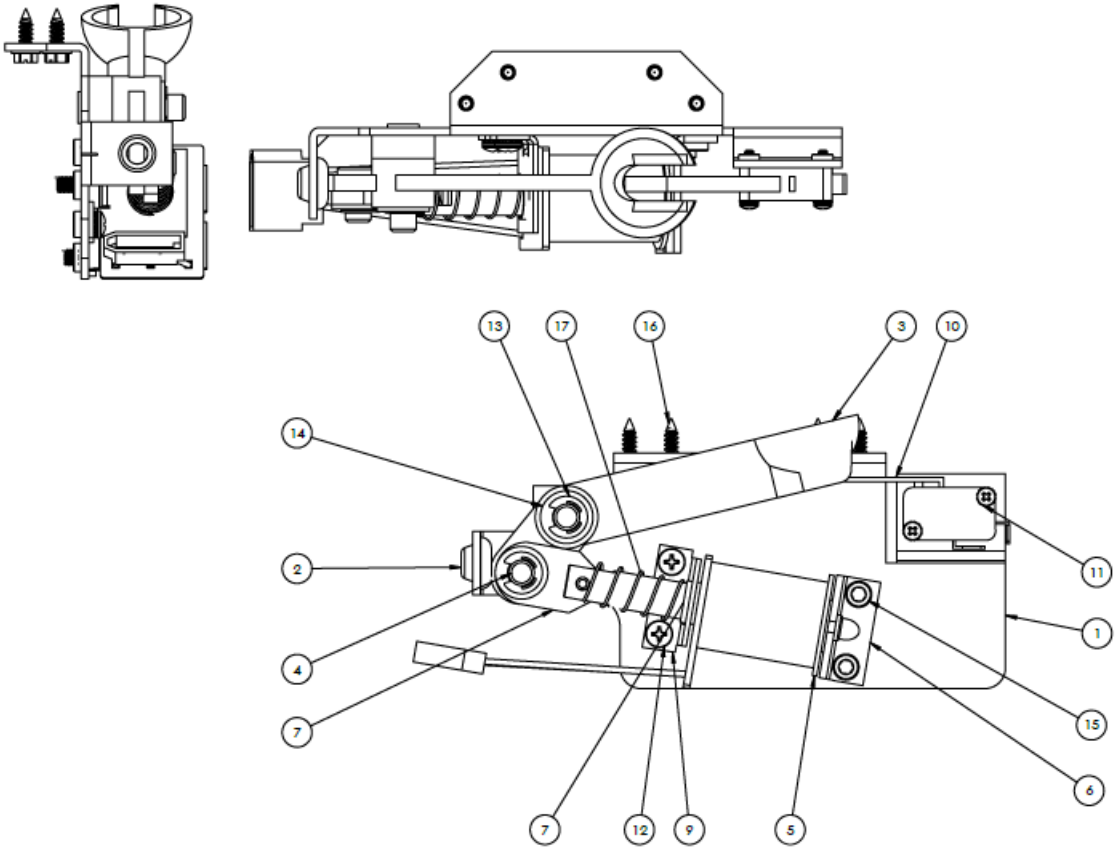

Table 7.9 Parts for Catapult Assembly

Item No.	Quantity	Part Description	Part Number
1	1	Catapult Bracket Assembly	SUB0002-00
2	1	VUK Rubber Grommett	RBR0010-00
3	1	Catapult Arm	PLS0022-00
4	1	Catapult Plunger Link Pen	MCH0005-00
5	1	23-800 Lugless Coil	COI0001-01
6	1	Coil Stop Bracket	MTL0073-00
7	1	Catapult Plunger Assembly	PGR0006-00
8	1	Coil Sleeve 1-3/4” x 1/2” No Flange	PLS0035-00
9	1	Coil Centering Backet	MTL0072-00
10	1	Catapult Switch	SWI0017-00
11	2	4-40 X 5/8 PPH SEMS MS	MAS1004-10

Item No.	Quantity	Part Description	Part Number
12	2	8-32 X 1/4" SEMS MS Zinc	MAS1008-04
13	2	5/16 E Ring	SPC0003-10
14	2	.361 x .500 x .059 Washer	SPC0008-00
15	2	10-32 x 3/8" Socket Head Cap MS	MSA4110-06
16	4	#8 X 1/2" HWH SMS Zinc	SMS2008-08
17	1	Ball Trough Spring	SPR0005-00

LEFT FLIPPER ASSEMBLY

Figure 7.17 Left Flipper Assembly - Detailed

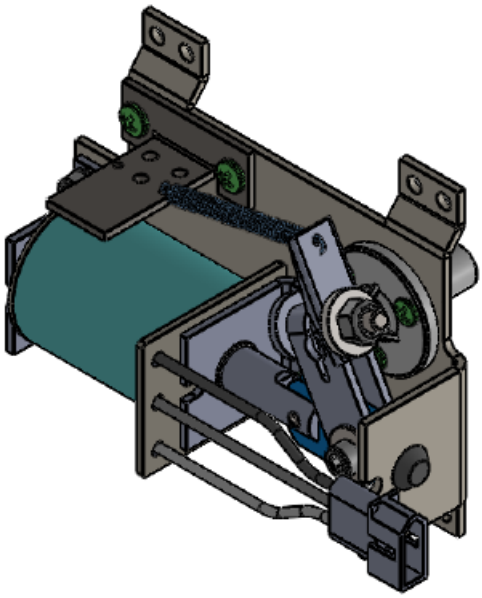

Figure 7.18 Left Flipper Assembly - Detailed

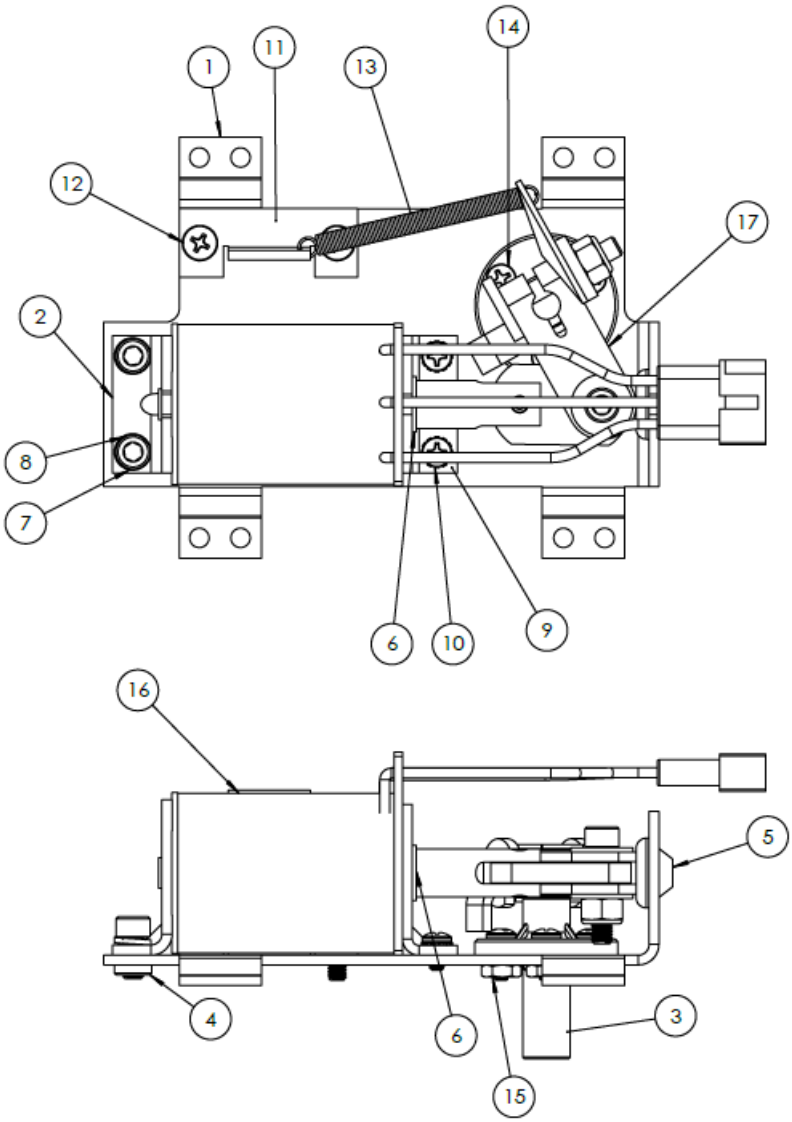

Table 7.10 Parts for Left Flipper Assembly

Item No.	Quantity	Part Description	Part Number
1	1	Left Flipper Bracket	MTL0107-00
2	1	Coil Stop	MTL0073-00
3	1	Flipper Bushing	PLS0048-00
4	2	PEM Nut	PEM SS-032-0 ZI--N
5	1	Lug Bumper	RBR0011-00

Item No.	Quantity	Part Description	Part Number
6	1	Coil Tubing	PLS0047-00
7	2	#10 Split Lock Washer	91102A740
8	2	10/32 X 3/8 SH CS	91251A340
9	1	Coil Retaining Bracket	MTL0104-00
10	2	6/32 X 1/4 PPHS MS SEMS	90402A144
11	1	EOS Switch Bracket	MTL0105-00
12	2	8/32 X 5/16 PPHS MS	90272A191
13	1	Coil Retaining Spring	9654K106
14	3	6/32 X 3/8 PPH MS	90272A146
15	3	6/32 HEX Nut	90480A007
16	1	Lugless Flipper Coil	COL0003-00
17	1	Left Flipper Crank Assembly	ASM0055-01

LEFT FLIPPER CRANK LINK ASSEMBLY

Figure 7.19 Left Flipper Crank Link Assembly

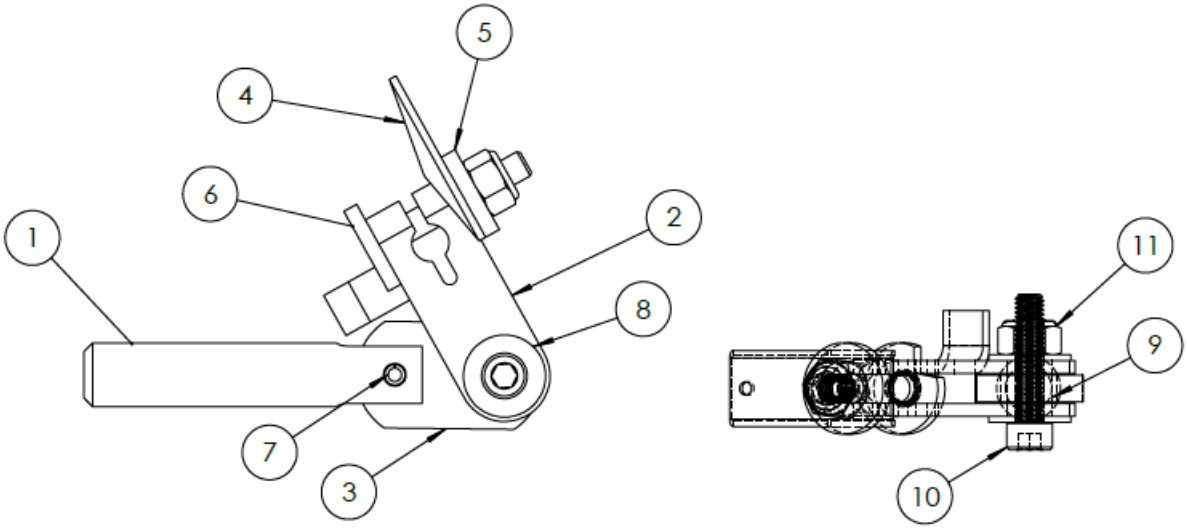

Table 7.11 Parts for Left Flipper Crank Link Assembly

Item No.	Quantity	Part Description	Part Number
1	1	Flipper Plunger	MCH0023-00
2	1	Flipper Crank Left	MTL0109-01
3	1	Flipper Link	PLS0049-00
4	1	Flipper Spring Retaining Bracket	MTL0108-00
5	1	#10 Thick Washer	SPC0013-00
6	1	Locking Stud Bolt	SPC0011-00
7	2	5/32 X 7/16" Spirol Pin	SPC0012-00
8	2	#10 Flat Washer	WAS0010-00
9	1	Bushing Link Spacer	MCH0022-00
10	1	10/32 X 7/8 CS MS	91251A346
11	2	10/32 Hex Nut	90631A411

LINE FILTER ASSEMBLY

Figure 7.20 Line Filter Assembly

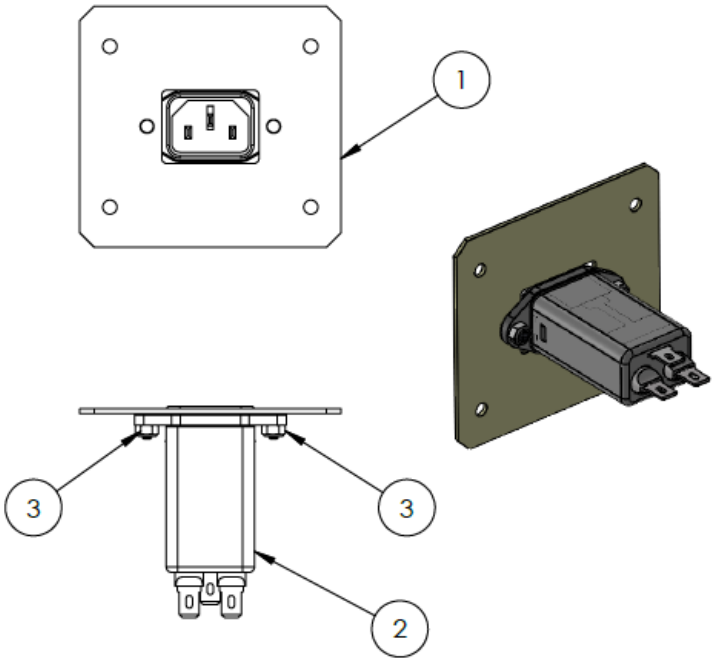

Table 7.12 Parts for Line Filter Assembly

Item No.	Quantity	Part Description	Part Number
1	1	Line Filter MTG Plate	MTL0102-00
2	1	Line Filter	ELE0006-00
3	2	4-40 Nylon Locknut	NUT0004-00

RAMP ASSEMBLY

Figure 7.21 Ramp Assembly

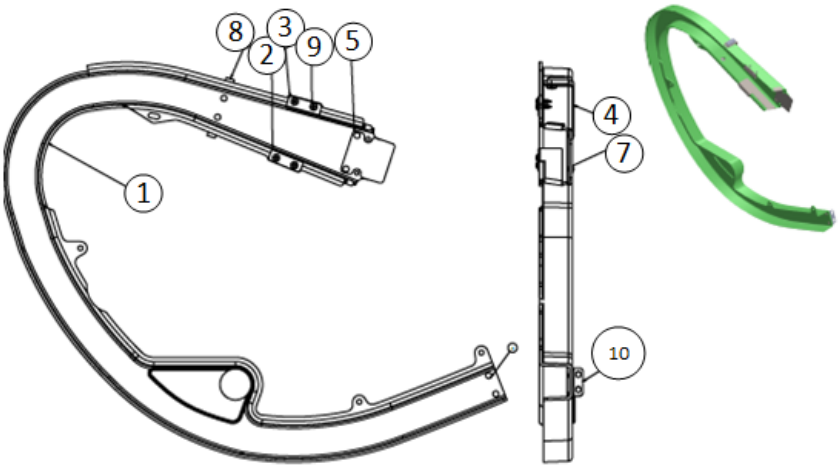

Table 7.13 Parts for Ramp Assembly

Item No.	Quantity	Part Description	Part Number
1	1	HH Plastic Ramp	PLS0004-00C
2	1	Ramp Protector (Left)	MTL0024-01B
3	1	Ramp Protector (Right)	MTL0024-00B
4	1	Ramp Opto Bracket	MTL0033-00
5	1	HH Ramp Flap	MTL0027-00
6	6	Rivet .13 X 18 Steel Nickel PLT	SPC0005-00
7	2	#4 Flat Washer	WAS0004-00
8	1	Optek Infared LED Assy	WCA0016-00
9	4	#6 X 1/2" TH SMS Zinc	SMS7006-08
10	1	Wire Ramp Exit Plate	MTL0092-00

RAMP SIGN ASSEMBLY

Figure 7.22 Ramp Sign Assembly

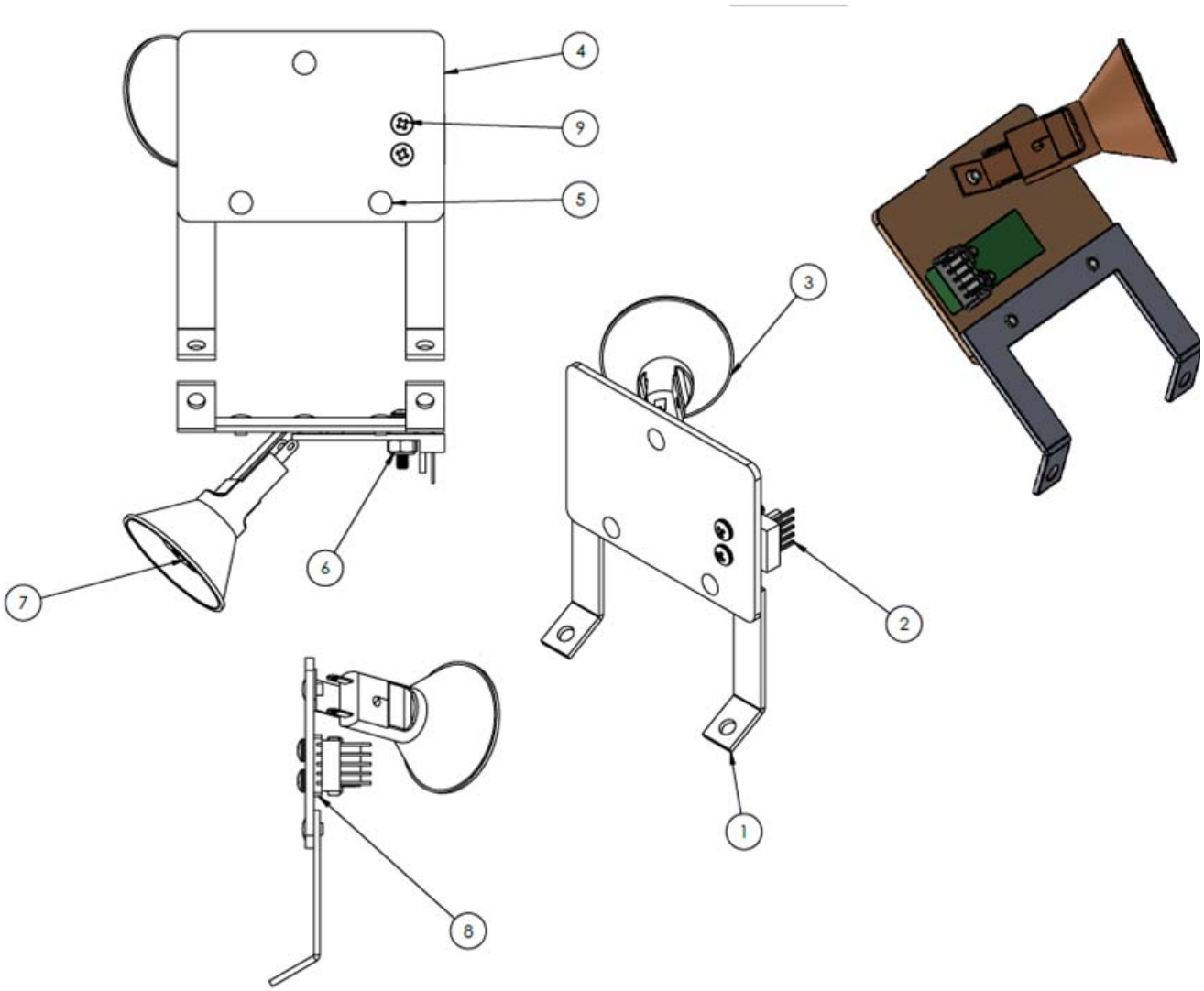

Table 7.14 Parts for Ramp Sign Assembly

Item No.	Quantity	Part Description	Part Number
1	1	Ramp Sign MTG Brkt	MTL0095-00A
2	1	Single RGB PCB	PCB0009-00
3	1	Bronze Spotlight STD MTG	TOY0011-01
4	1	Plastic Sign	PLS0001-29
5	3	1/8" X 3/16" Long X 7/32" Head Nickel Rivet	SPC0005-00
6	2	4-40 Nylon Locknut	NUT0004-00

Item No.	Quantity	Part Description	Part Number
7	1	Spotlight Flasher LED Bulb	LIT0004-00
8	1	Plastic Spacer	PLS0001-30
9	2	4-40 X 1/2” Black PPH MS	MAS0004-08

RIGHT FLIPPER ASSEMBLY

Figure 7.23 Right Flipper Assembly

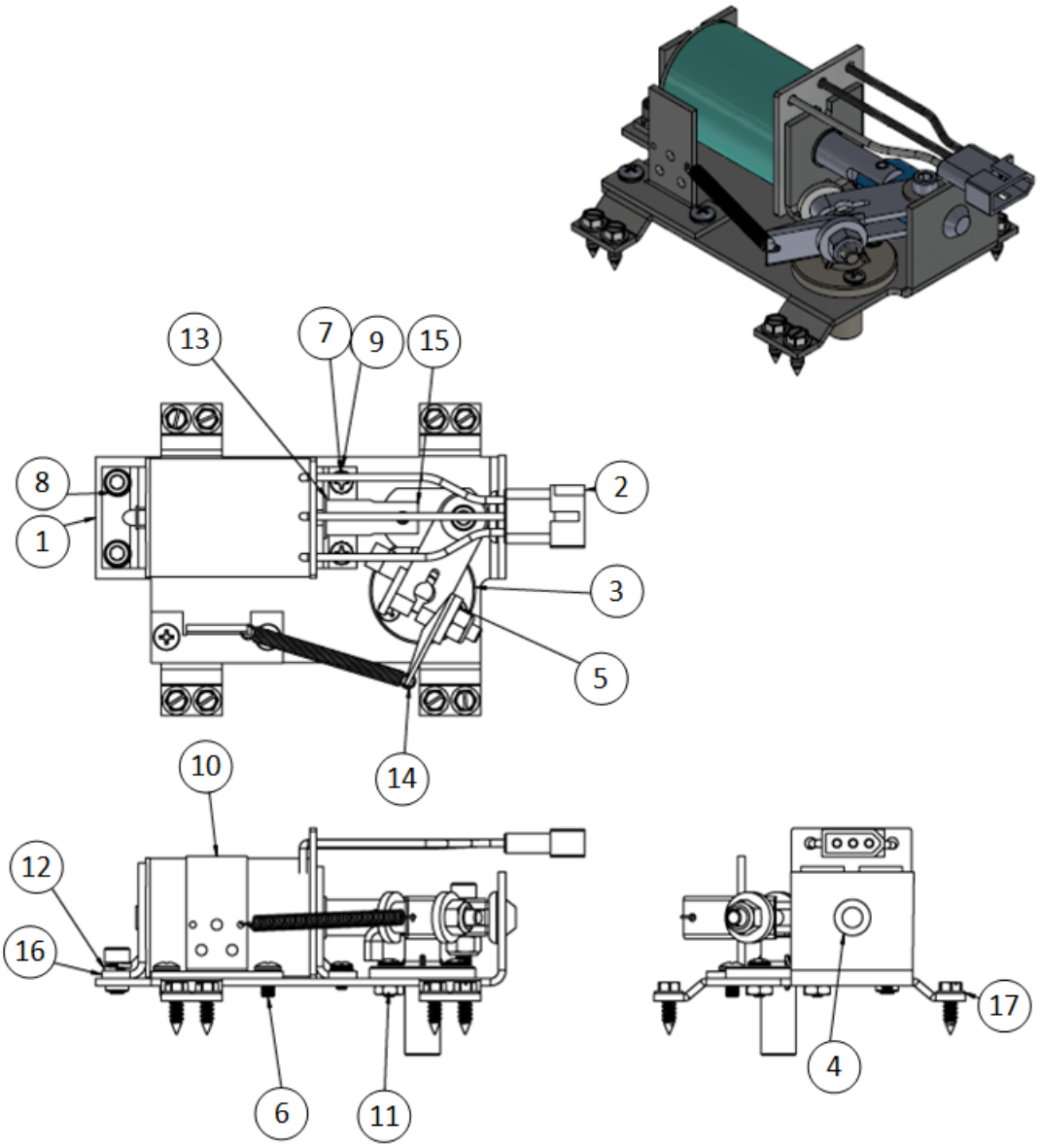

Table 7.15 Parts for Right Flipper Assembly

Item No.	Quantity	Part Description	Part Number
1	1	Right Flipper Bracket	MTL0106-00
2	1	FL11629 Lugless Coil	COL0003-00
3	1	Flipper Bushing	PLS0048-00
4	1	Plug Bumper	RBR0011-00
5	3	6/32 X 3/8 PPH MS	90272A146
6	2	8/32 X 5/16 PPHS MS	90272A191
7	2	6/32 X 1/4 PPHS MS SEMS	90402A144
8	2	10/32 X 3/8 SH CS	91251A340
9	1	Coil Retaining Bracket	MTL0104-00
10	1	EOS Switch Bracket	MTL0105-00
11	3	6/32 Hex Nut	90480A007
12	2	#10 Split Lock Washer	WAS1010-00
13	2	Coil Tubing	PLS0047-00
14	1	Coil Retaining Spring	SPR0008-00
15	1	Right Flipper Link Crank Assy.	ASM0055-00
16	1	Coil Stop Bracket	MTL0073-00
17	1	#8 X 1/2" HWH SMS Zinc	SMS2008-08

Figure 7.24 Right Flipper Assembly Detailed

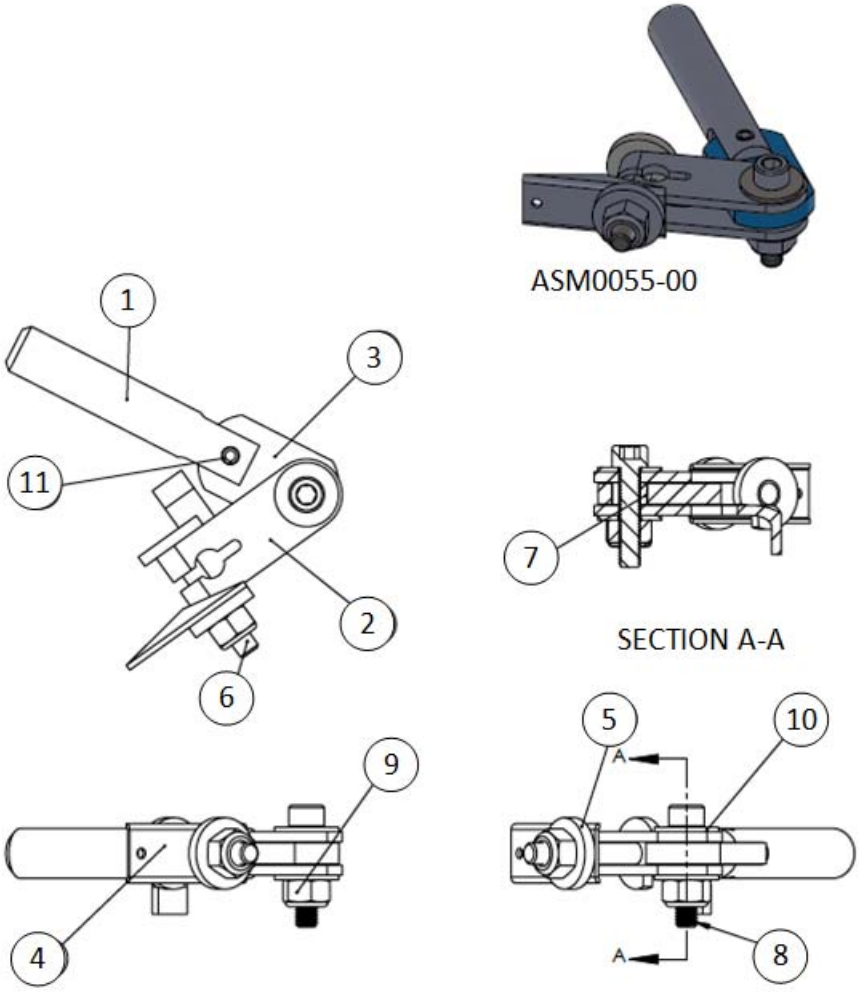

Table 7.16 Parts for Right Flipper Assembly Detailed

Item No.	Quantity	Part Description	Part Number
1	1	Flipper Plunger	MCH0023-00
2	1	Flipper Crank Right	MTL0109-00
3	1	Flipper Link	PLS0049-00
4	1	Flipper Spring Retaining BRKT	MTL0108-00
5	1	#10 Thick Washer	SPC0013-00
6	1	Locking Stud Bolt	SPC0011-00
7	1	Bushing Link Spacer	MCH0022-00
8	1	10/32 X 7/8" CS MS	MAS4010-14
9	2	NUT0010-00	NUT0010-00

Item No.	Quantity	Part Description	Part Number
10	2	#10 Flat Washer	91251A346
11	1	5/32 X 7/16" Spiral PIN	SPC0012-00

SPOTLIGHT (LEFT FLIPPER) ASSEMBLY

Figure 7.25 Spotlight (Left Flipper) Assembly

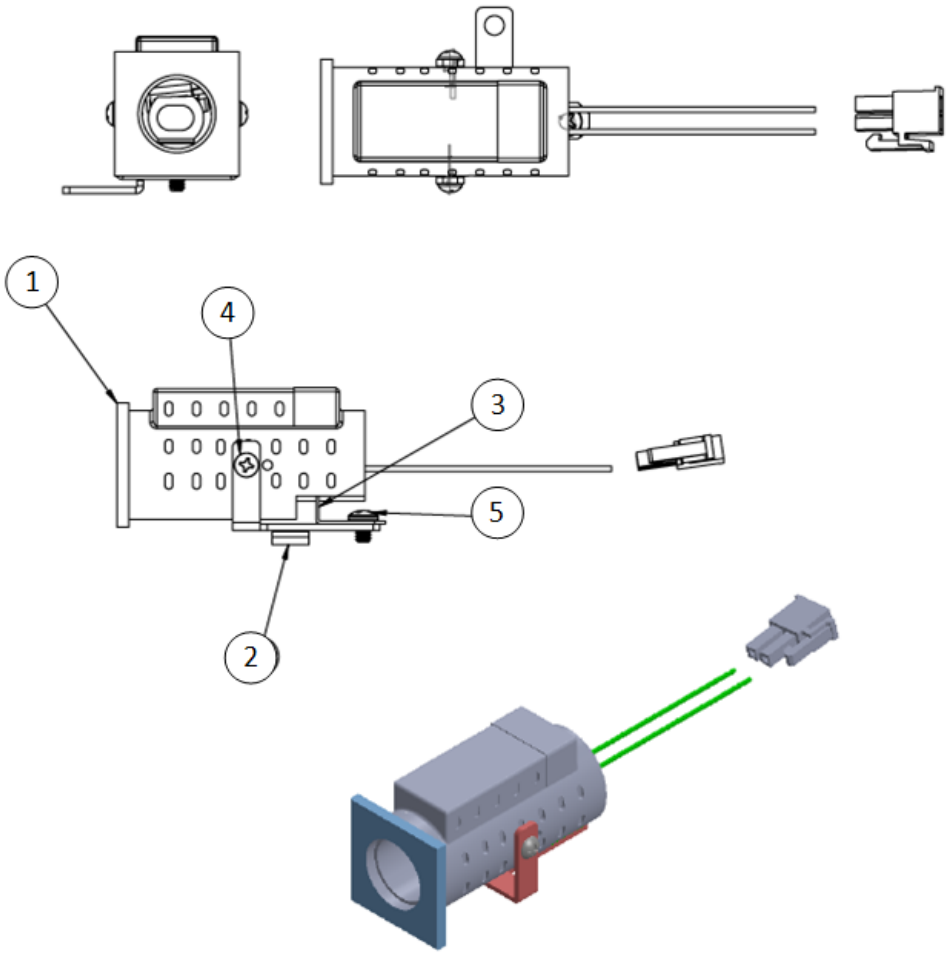

Table 7.17 Parts for Spotlight (Left Flipper Assembly

Item No.	Quantity	Part Description	Part Number
1	1	Camera Spotlight	TOY0010-00
2	1	Spotlight MTG Bracket - FLPR Left	MTL0100-00
3	1	44 LED Laydown Socket	PLS0036-00
4	2	#4 x 1/4 PPH SMS Zinc (90190A106)	SMS0004-04

Item No.	Quantity	Part Description	Part Number
5	1	6-32 X 3/16 PPH MS Zinc	MAS0006-03
6	1	2 PIN Molex Mini Fit JR Connector - Plug	WIR0006-02P

SPOTLIGHT (RIGHT FLIPPER) ASSEMBLY

Figure 1 Spotlight (Right Flipper) Assembly

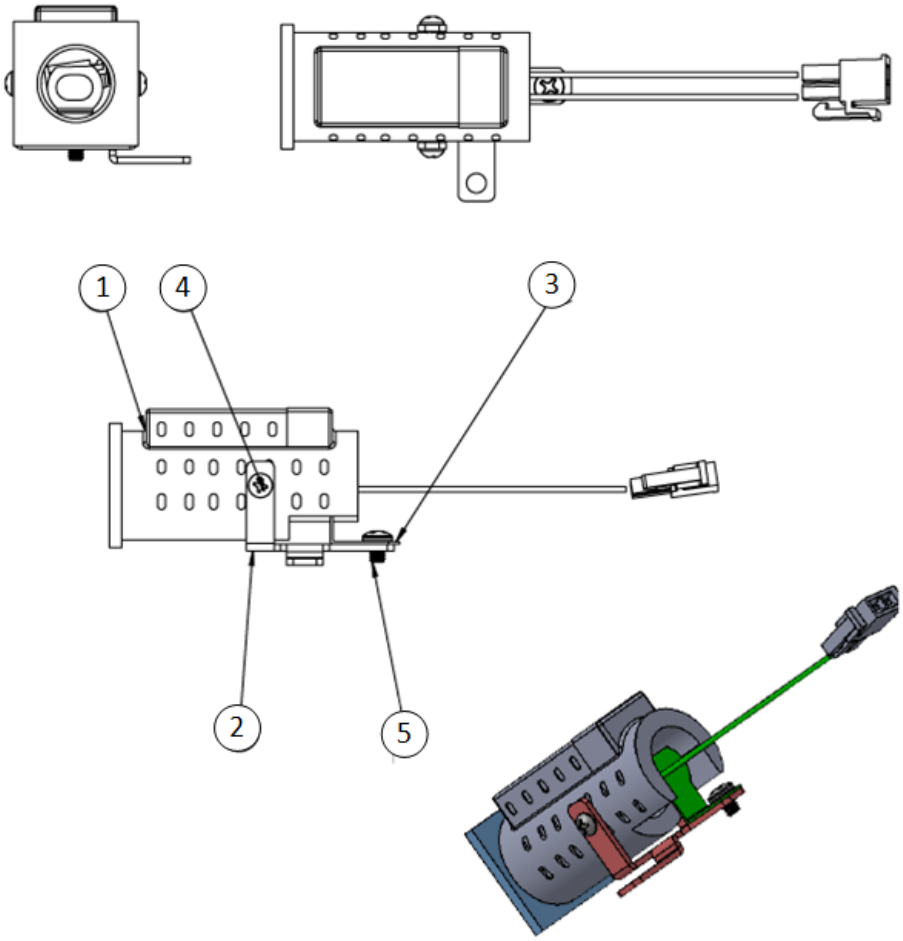

Table 7.18 Parts for Spotlight (Right) Flipper Assembly

Item No.	Quantity	Part Description	Part Number
1	1	Camera Spotlight	TOY0010-00
2	1	Spotlight MTG Bracket - FLPR Right	MTL0100-01
3	1	44 LED Laydown Socket	PLS0036-00
4	2	#4 x 1/4 PPH SMS Zinc (90190A106)	SMS0004-04

Item No.	Quantity	Part Description	Part Number
5	1	6-32 X 3/16 PPH MS Zinc	MAS0006-03
6	1	2 PIN Molex Mini Fit JR Connector - Plug	WIR0006-02P

STAGE MECH ASSEMBLY

Figure 7.26 Stage Mech Assembly

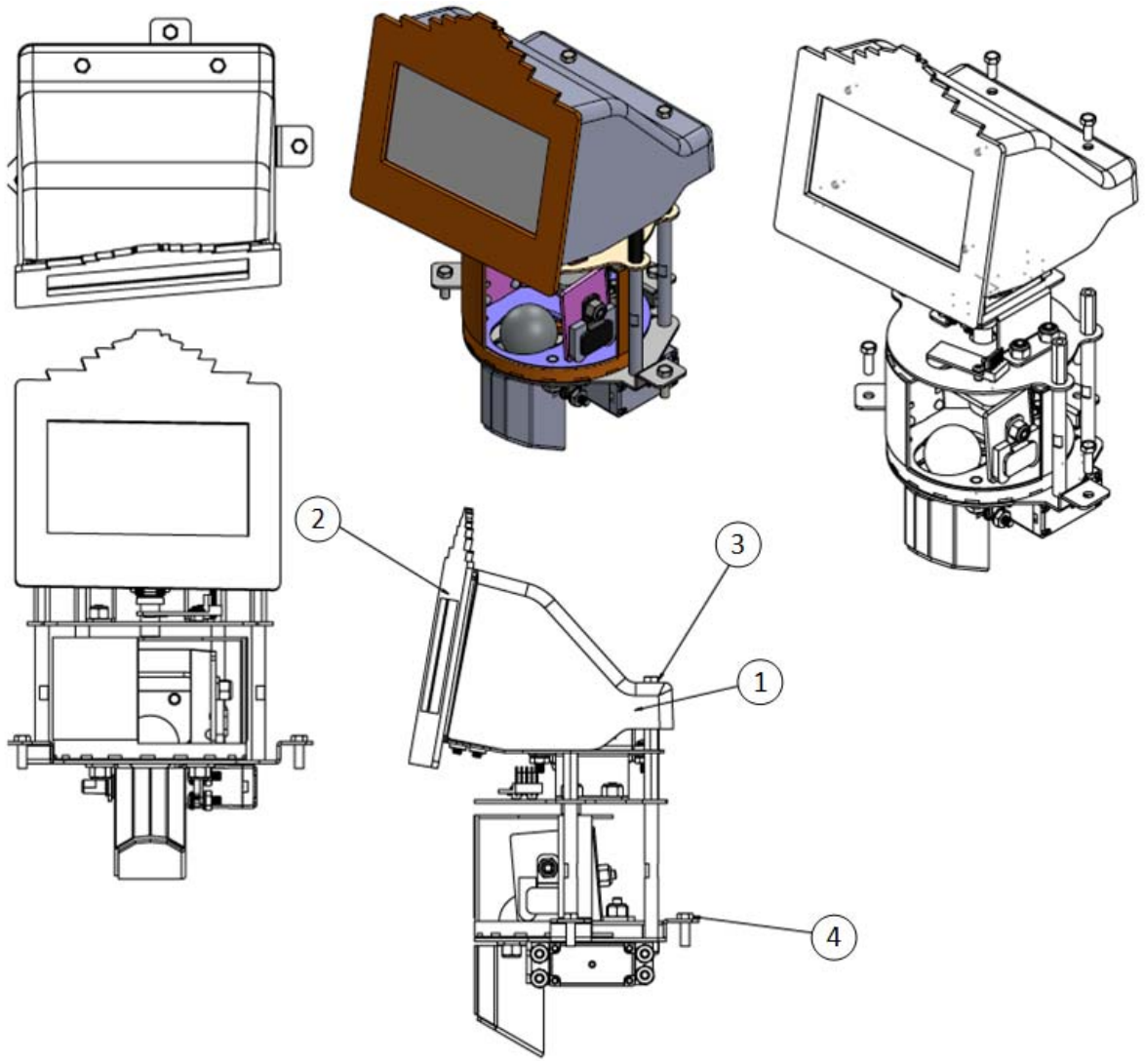

Table 7.19 Parts for Stage Mech Assembly

Item No.	Quantity	Part Description	Part Number
1	1	Houdini Stage Mech	ASM0028-00

Item No.	Quantity	Part Description	Part Number
2	1	Houdini Stage Monitor Assy	ASM0025-00
3	4	8-32 x 3/8" HWH MS Zinc	MAS2008-06
4	3	8-32 x 1/2 HWH MS ZINC	MAS2008-08
5	1	Stage Monitor Cover	PLS0039-00
6	2	1/4" F-M Standoff 1.19 8-32 Ends	HEX0408-19 MF

STAGE MECH BREAKDOWN ASSEMBLY

Figure 7.27 Stage Mech Assembly

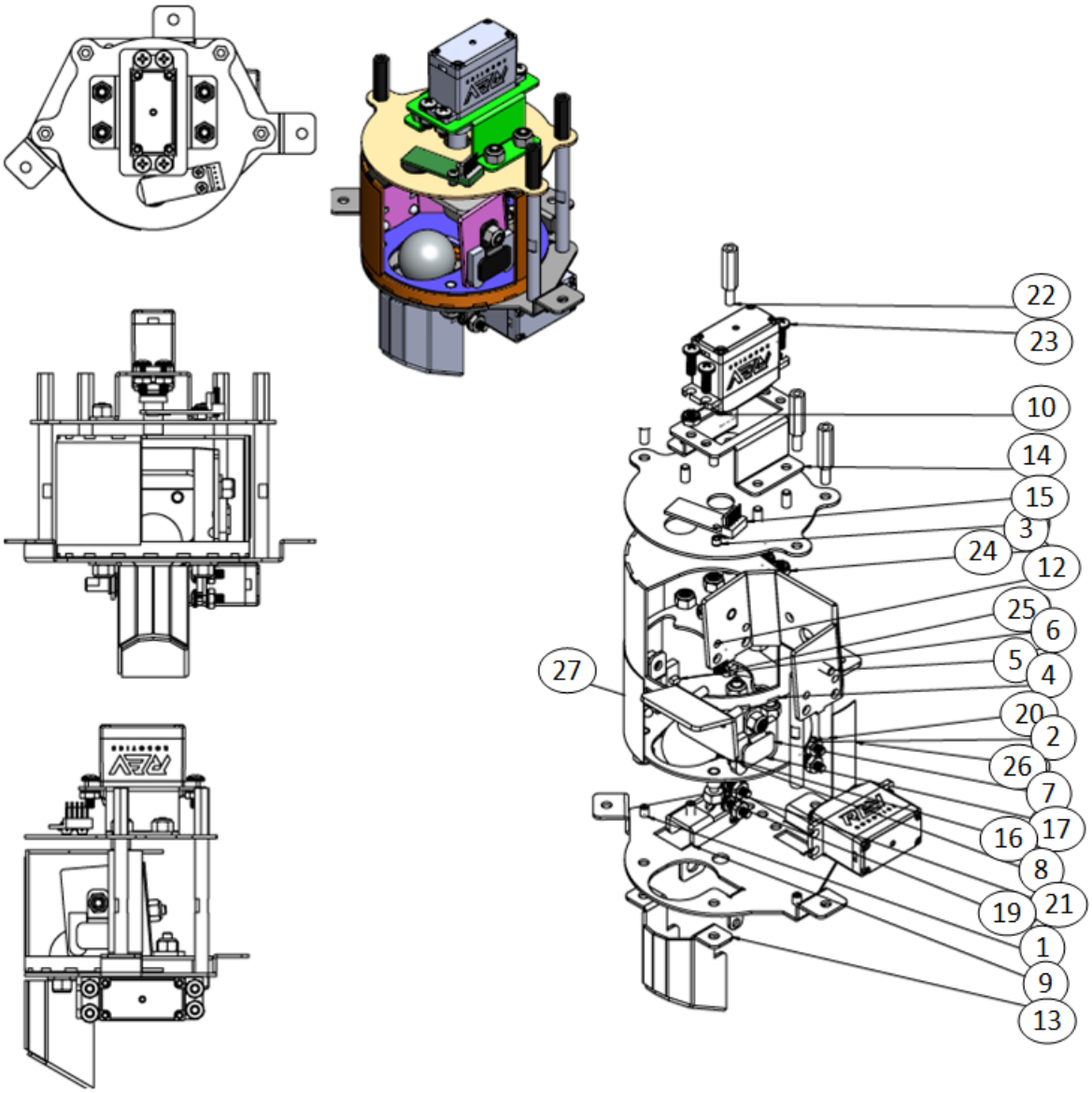

Table 7.20 Parts for Stage Mech Breakdown Assembly

Item No.	Quantity	Part Description	Part Number
1	1	Stage Base	MTL0056-00A
2	1	Stage Weldment	MTL0058-00A
3	1	Stage Top	MTL0057-00C
4	1	Curtain	MTL0049-00

Item No.	Quantity	Part Description	Part Number
5	1	Stage Backdrop	MTL0055-00B
6	2	Optek Phototransistor	SWI0007-01
7	2	Stage Opto Hold Down	MTL0053-00A
8	1	Pinball	MCH0011-00
9	1	Trick Ball Support	MTL0059-00A
10	2	Stage Servo Motor	MTR0001-00
11	1	M3 Male Threaded Shaft	MCH0010-00
12	1	Servo Shaft Adaptor	MCH0015-00
13	1	Ball Guide Undermount	MTL0041-00
14	1	Curtain Motor Support	MTL0042-00A
15	1	Single RGB PCB	PCB0009-00
16	1	Stage Snub Plate	MTL0054-00A
17	2	Optek Infared LED	SWI0007-00
18	2	.250 Snap In Nyliner	PLS0037-00
19	13	8-32 Nylon Lockout Low Profile	NUT0008-00
20	4	2-1/2" F-F 1/4" Round Standoff 8-32 Tapped	RND0408-36
21	3	Spacer .17 ID X .25 OD x .25 LG.	MCH0018-00
22	4	1/4" F-M Standoff 7/8 8-32 Ends	HEX0408-14MF
23	8	8-32 x 1/2" PPH MS Zinc	MAS0008-08
24	8	8-32 Keps Nut	NUT1008-00
25	2	MS 4-40 X .25 PPH Zinc	90272A106
26	1	4-40 x 3/16 PPH MS Zinc	DCL0004-01A
27	1	Large Curtain Decal	DCL0004-01
28	1	4 Pin Molex Mini Fit JR Connector - Plug	WIR0006-04P
29	1	Female Mini Fit JR Terminal	WIR0007-00F

STAGE MONITOR ASSEMBLY

Figure 7.28 Stage Monitor Assembly

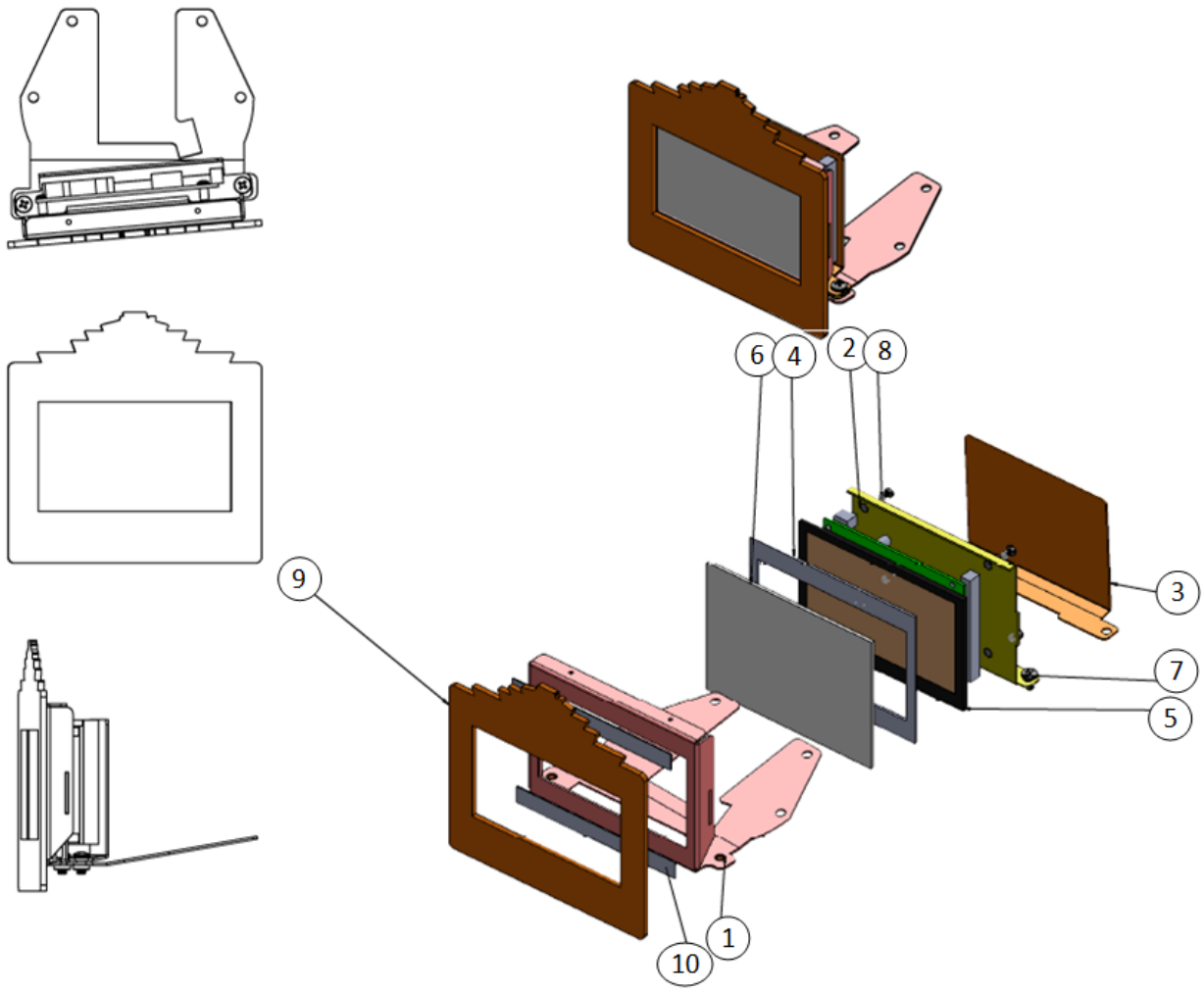

Table 7.21 Parts for Stage Monitor Assembly

Item No.	Quantity	Part Description	Part Number
1	1	Stage Monitor Front Housing	MTL0052-00B
2	1	Stage Monitor Back Plate	MTL0051-00
3	1	Driver Board Cover	MTL0050-00
4	1	Stage Monitor Gasket	RBR0006-00
5	1	4.3” Stage Monitor	ELE0002-00
6	1	Monitor Protective Lens	PLS0017-00
7	2	8-32 x 5/16 PPH MS Zinc	MAS0008-05

Item No.	Quantity	Part Description	Part Number
8	4	4-40 x 3/16 PPH MS Zinc	MAS0004-03
9	1	HH Marquee Front	PLS0040-00
10	2	3/8" W x 4" L x 1/32" Thick Foam Tape	MSC0013-00

STEAMER TRUNK ASSEMBLY

Figure 7.29 Steamer Trunk Assembly

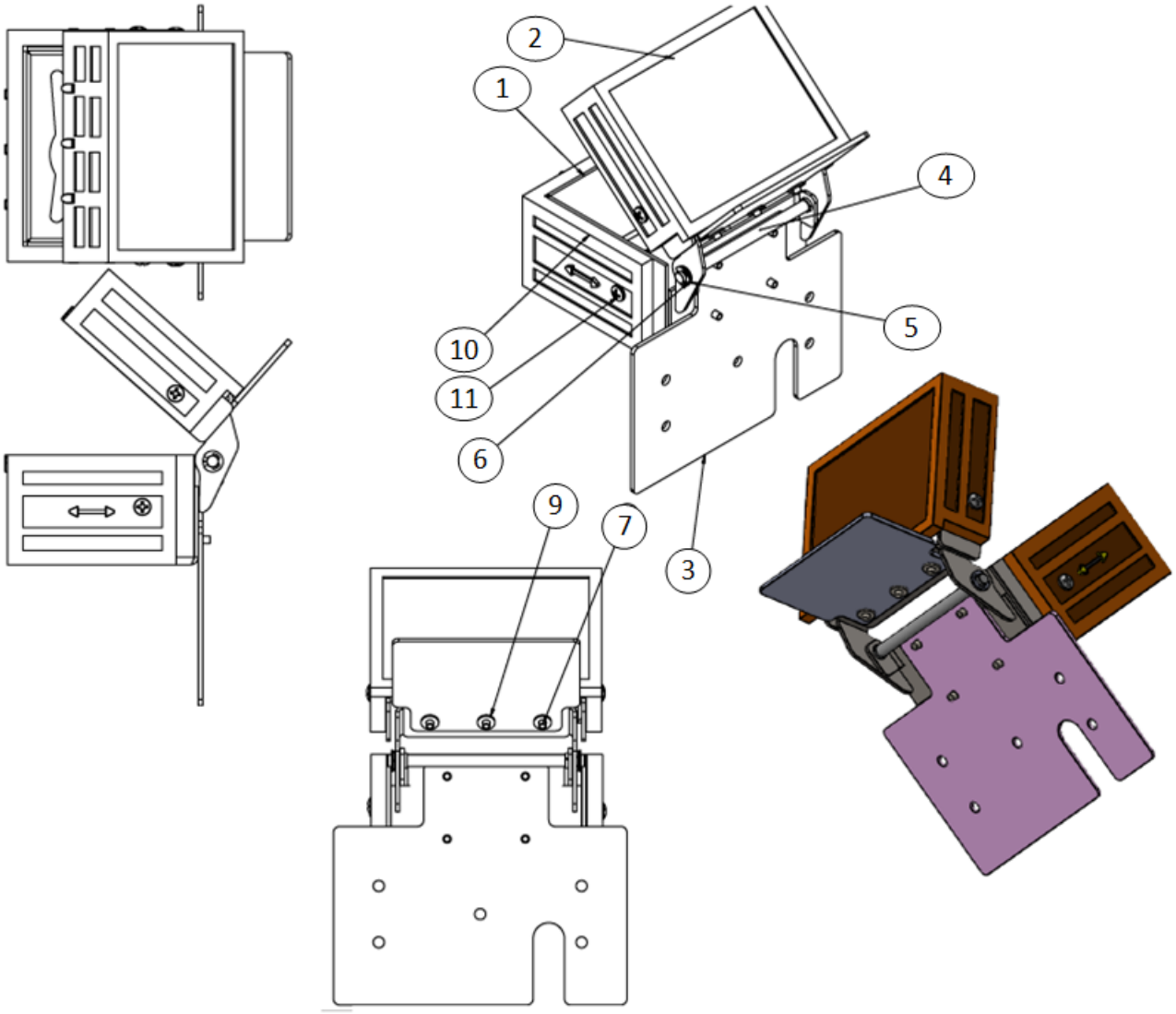

Table 7.22 Parts for Steamer Trunk Assembly

Item No.	Quantity	Part Description	Part Number
1	1	Steamer Trunk Bottom	MTL0014-00B
2	1	Steamer Trunk Top	MTL0013-00B
3	1	Steamer Trunk Mounting Plate	MTL0015-00C
4	1	Steamer Pivot Pin	MCH0004-00
5	2	Nyliner - 3/16	PLS0021-00
6	2	3/16” E-Ring	SPC0003-03
7	7	1/8" x 1/4" Long 7/32" Head Nickel Rivet	SPC0005-01
8	1	Trunk Plastic	PLS0001-18
9	3	#4 Flat Washer	WAS0004-00
10	1	Steamer Trunk Bottom Toy	TOY0001-01
11	4	6-32 x 3/8" PPH MS Zinc	MAS0006-06
12	1	Steamer Trunk Top Toy	TOY0001-00

STEAMER TRUNK DIVERTER ASSEMBLY

Figure 7.30 Steamer Trunk Diverter Assembly

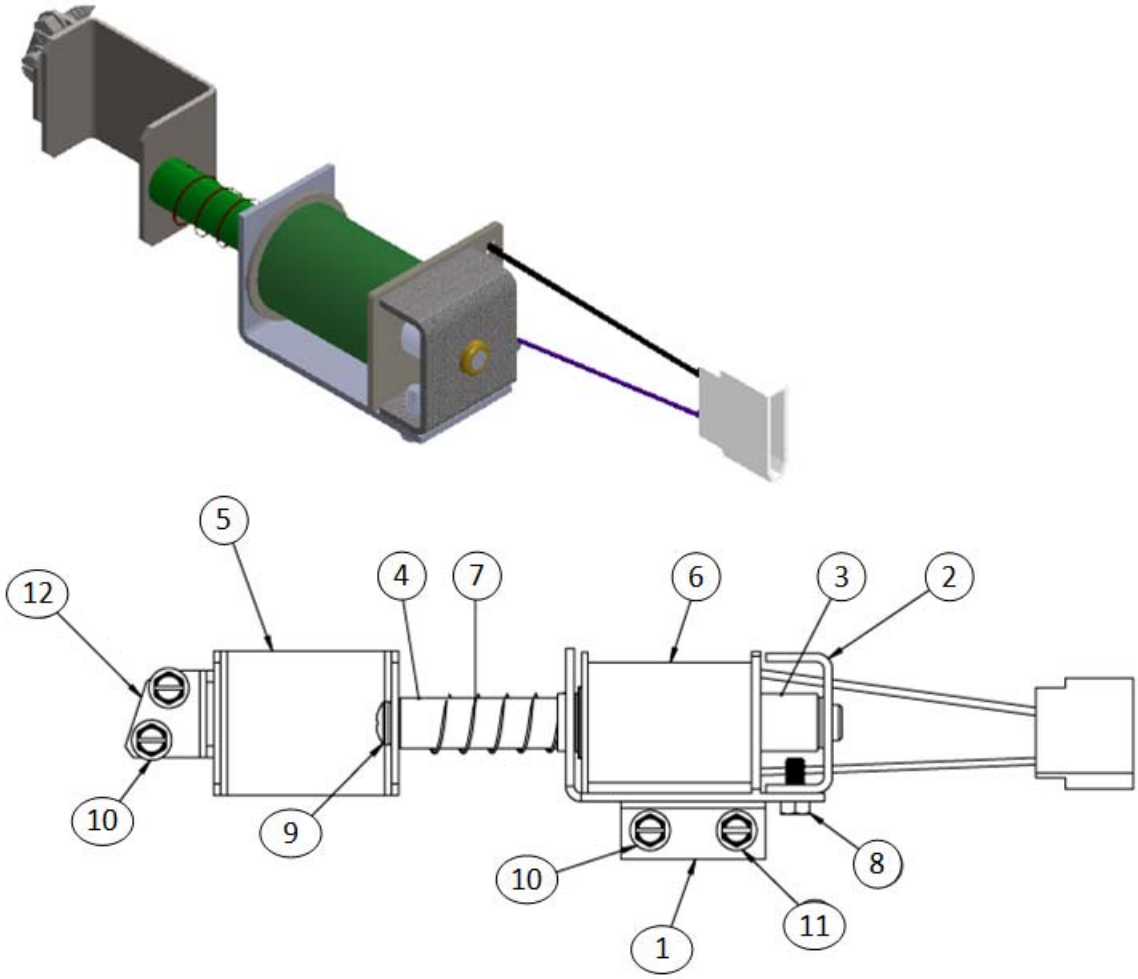

Table 7.23 Parts for Steamer Trunk Diverter Assembly

Item No.	Quantity	Part Description	Part Number
1	1	Diverter Coil Brkt	MTL0070-00
2	1	Diverter Coil Stop Bracket	SUB0006-00
3	1	Coil Sleeve 2-1/4 with 3/16” Flange	PLS0026-00
4	1	Steamer Diverter Plunger	PGR0007-00
5	1	Diverter Slide Plate	MTL0017-00A
6	1	23-800 Lugless Coil	COI0001-01
7	1	Slingshot Spring	SPR0002-00
8	2	8-32 x 3/8” HWH TFS 1/4” HEX Head	TFS-2008-06

Item No.	Quantity	Part Description	Part Number
9	1	10/32 X 3/8" PPH MS	MAS0010-06
10	3	#8 X 1/2" HWH SMS Zinc	SMS2008-08
11	1	8/32 X 3/4" HWH MS	MAS2008-12
12	1	Diverter End Stop Bracket	MTL0018-00

SUBWAY ASSEMBLY

Figure 7.31 Subway Assembly

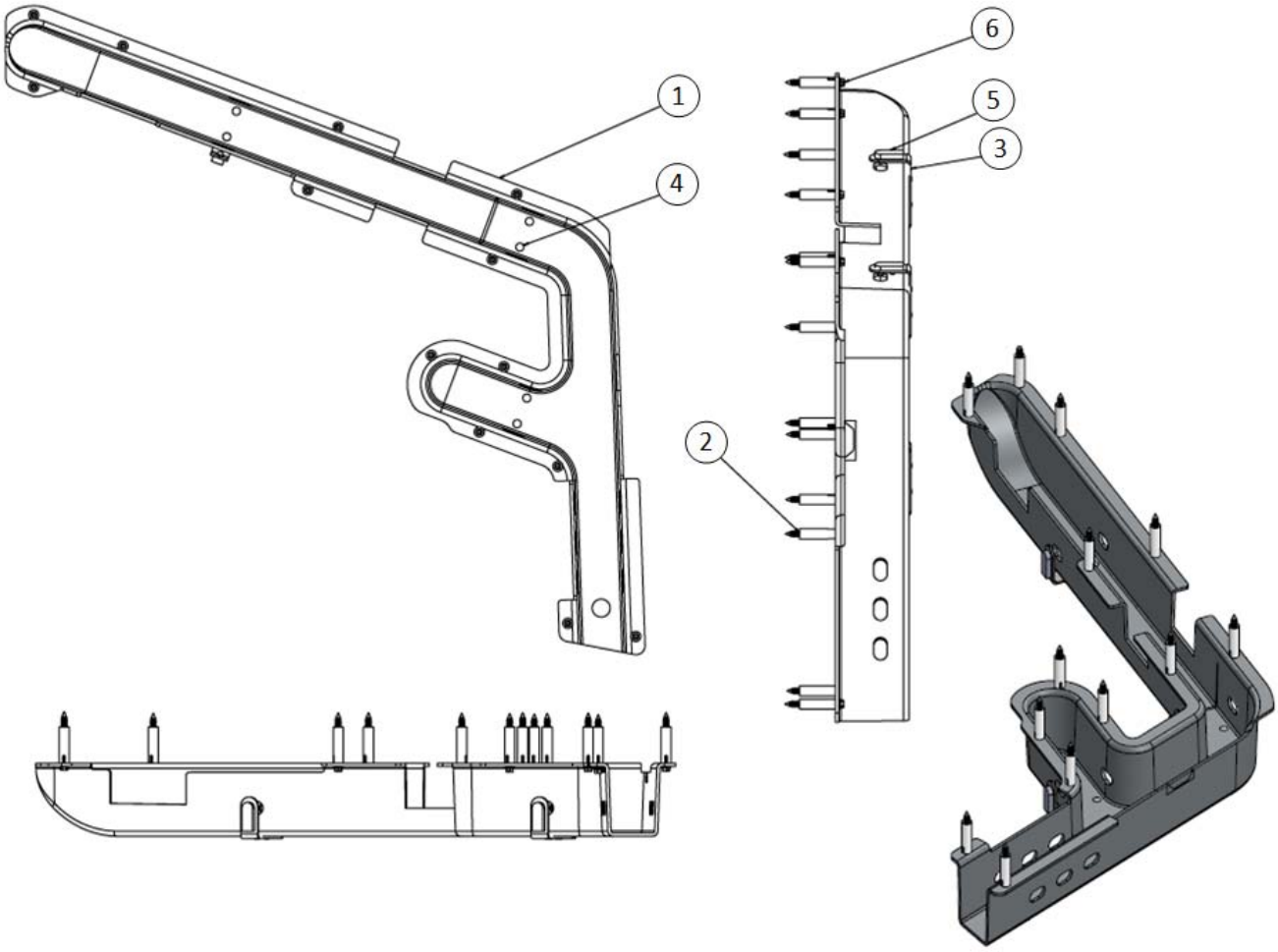

Table 7.24 Parts for Subway Assembly

Item No.	Quantity	Part Description	Part Number
1	1	HH Under Trough	PLS0003-00E
2	13	Nylon PCB Supports #8 HSRS*-16	PLS0020-00
3	3	Ramp Opto Bracket	MTL0033-00
4	6	1/8" X 3/16" Long X 7/32" Head Nickel Rivet	SPC0005-00
5	3	Optek Infared LED Assy	WCA0016-00
6	13	#6 X 1-1/2" HWH SMS Zinc	SMS2006-24

SUPER VUK SCOOP ASSEMBLY

Figure 7.32 Super VUK Scoop Assembly

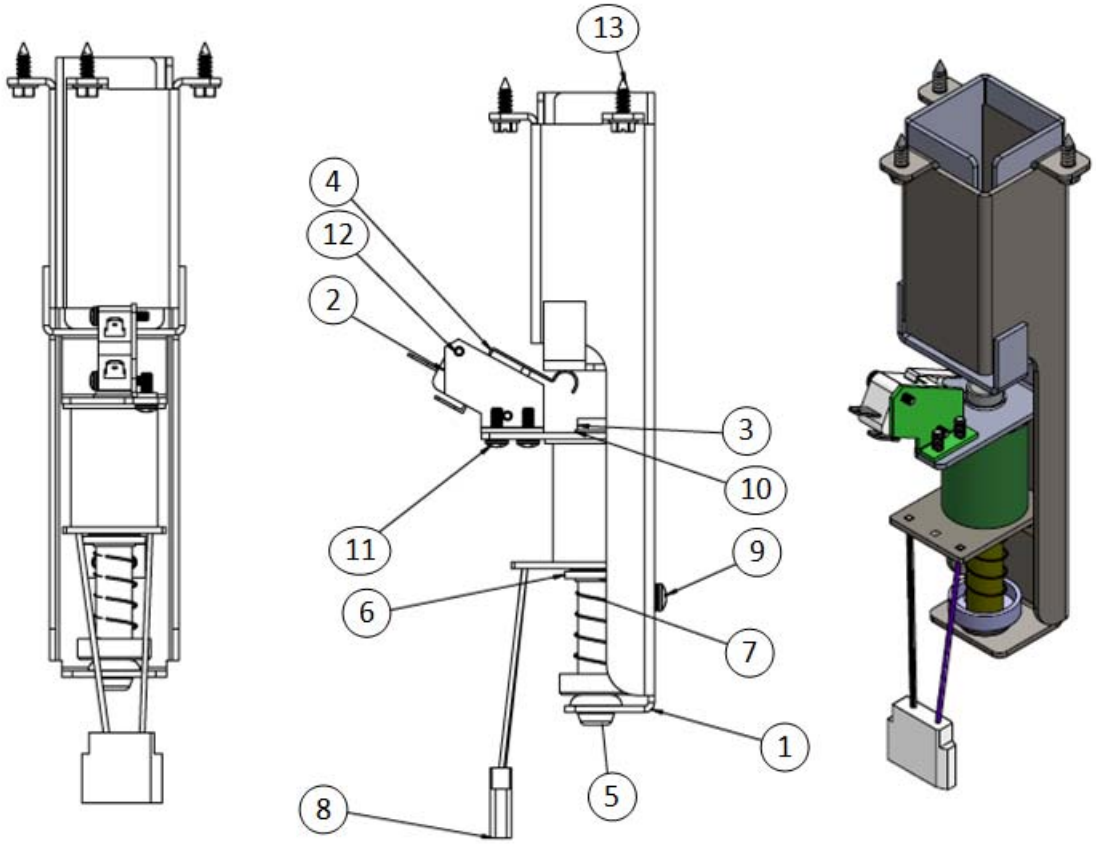

Table 7.25 Parts for Super VUK Scoop Assembly

Item No.	Quantity	Part Description	Part Number
1	1	Super VUK Weldment (3”)	SUB0001-00A
2	1	Super VUK Switch Mounting Bracket	MTL0062-00A
3	1	VUK Plunger	PGR0004-00
4	1	SuperVUK Microswitch	SWI0013-00
5	1	VUK Rubber Grommett	RBR0010-00
6	1	VUK Coil Retaining Bracket	MTL0061-00
7	1	VUK Spring	SPR0001-00
8	1	23-800 Lugless Coil	COI0001-01
9	2	8-32 X 1/4" PPH MS SEMS Zinc	MAS1008-04
10	1	Coil Sleeve 1-13/16" With 1/8" Flange	PLS0030-00
11	2	6-32 x 3/8" HWH MS Zinc	MAS2006-06
12	2	4-40 X 5/8" HWH MS SEMS Zinc	MAS2004-10
13	3	#8 X 1/2" HWH SMS Zinc	SMS2008-08

TRUNK SWITCH ASSEMBLY

Figure 7.33 Trunk Switch Assembly

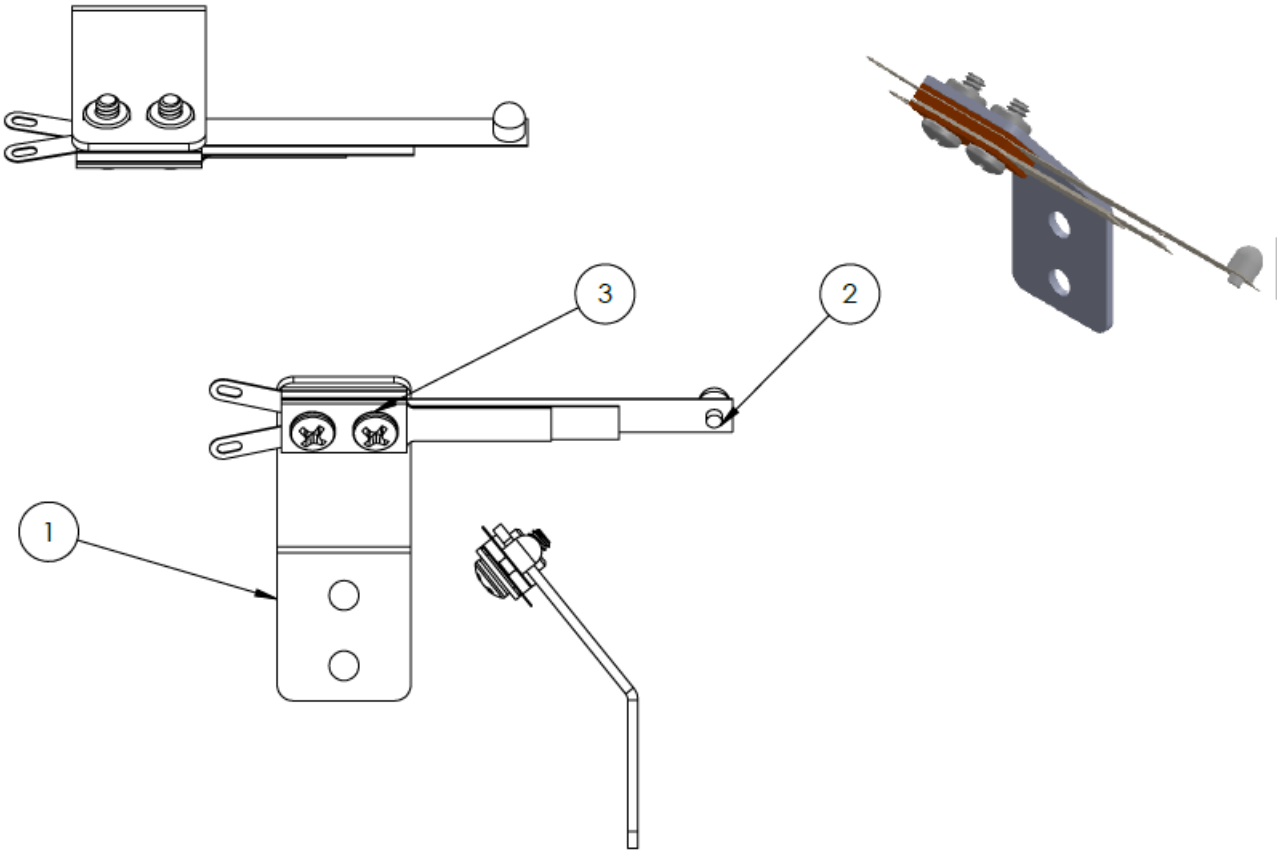

Table 7.26 Parts for Trunk Switch Assembly

Item No.	Quantity	Part Description	Part Number
1	1	Trunk Switch Mounting Bracket	MTL0077-00
2	1	Trunk Switch	SWI0018-00
3	2	6-32 x 3/8" PPH MS Zinc	MAS0006-06

TRUNK UP POST ASSEMBLY

Figure 7.34 Trunk Up Post Assembly

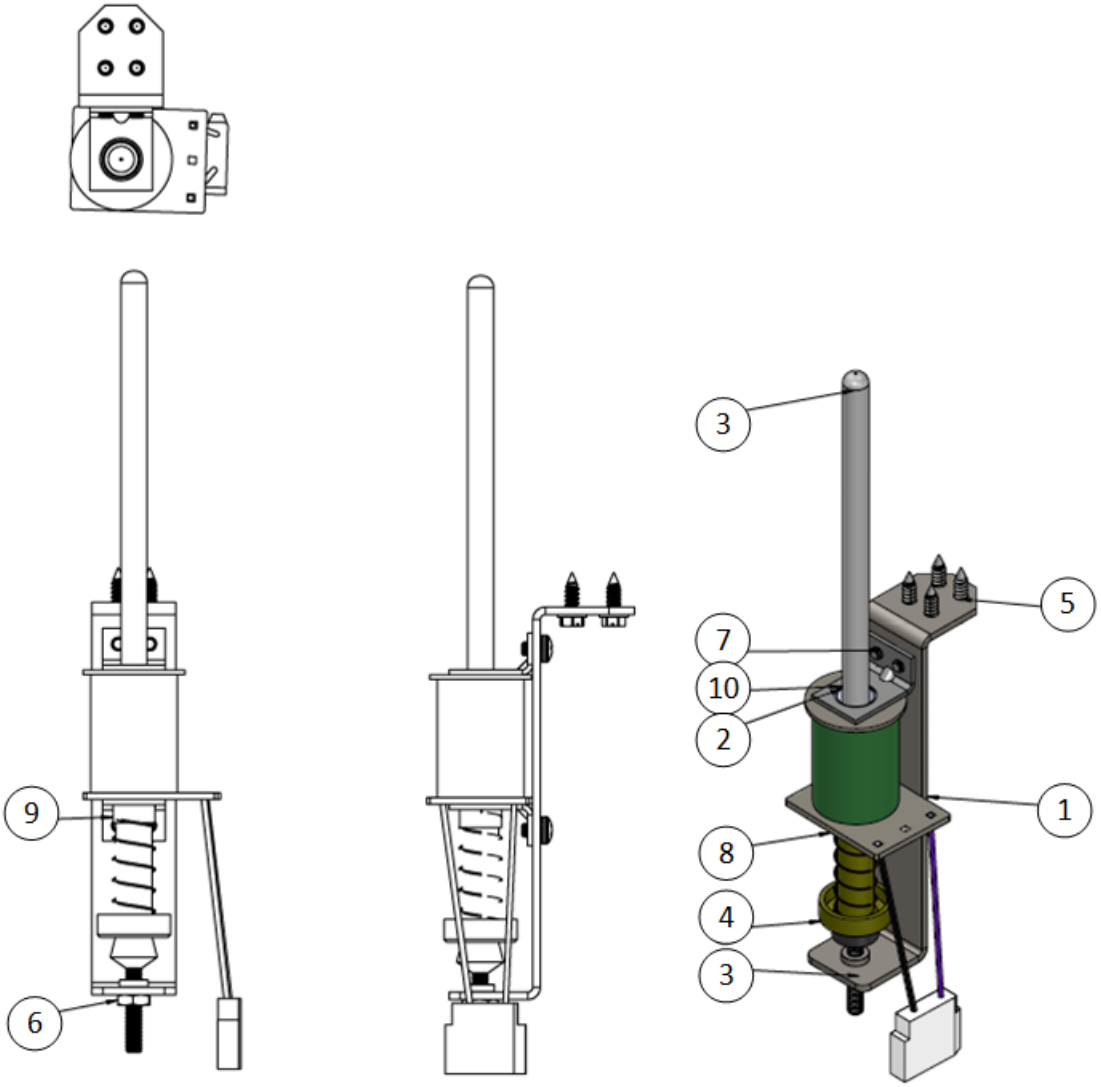

Table 7.27 Parts for Trunk Up Post Assembly

Item No.	Quantity	Part Description	Part Number
1	1	Up-Post Bracket	MTL0031-00
2	1	Coil Sleeve 1-7/8" With 1/4" Flange	PLS0019-00
3	1	Spindle Stop	SPC0004-00
4	1	Trunk Plunger	PGR0001-00
5	4	#8 X 1/2" HWH SMS Zinc	SMS2008-08
6	1		90480A195

Item No.	Quantity	Part Description	Part Number
7	4	8-32 X 1/4” SEMS MS Zinc	MAS1008-04
8	1	23-800 Lugless Coil	C0I0001-01
9	1	VUK Spring	SPR0001-00
10	2	VUK Coil Retaining Bracket	MTL0082-00

VUK ASSEMBLY

Figure 7.35 VUK Assembly

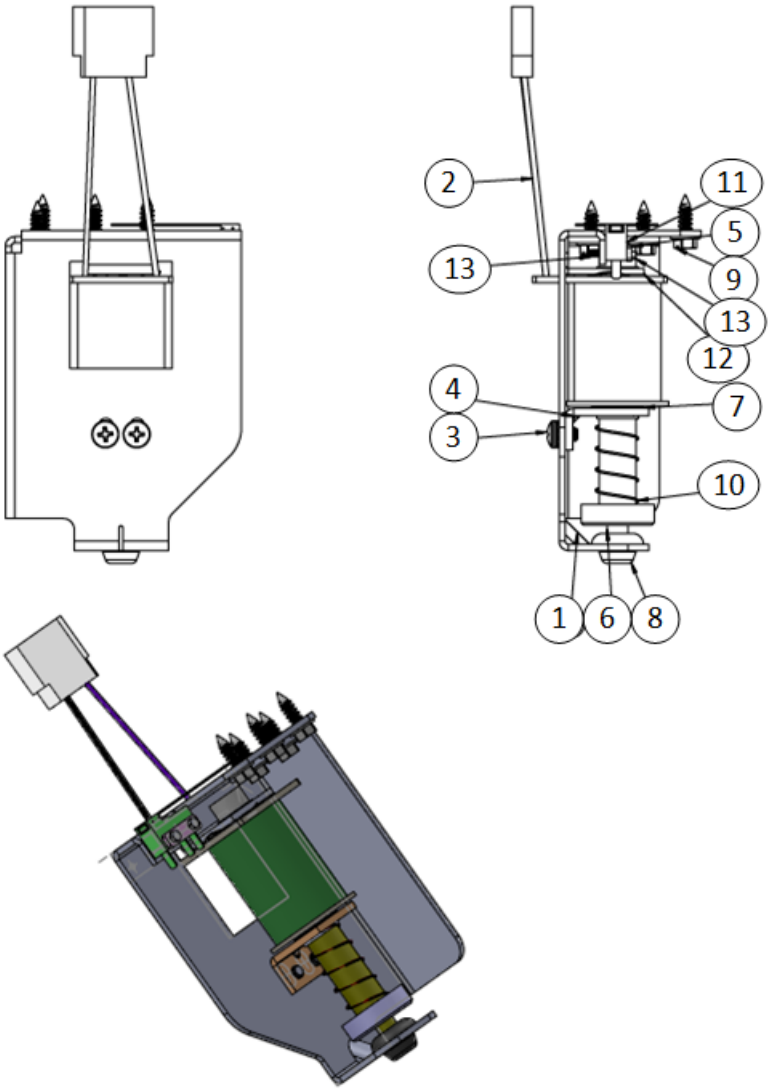

Table 7.28 Parts for VUK Assembly

Item No.	Quantity	Part Description	Part Number
1	1	VUK Assembly- Left Side Mount	MTL0088-00
2	1	23-800 Lugless Coil	C0I0001-01
3	2	8-32 X 1/4” PPH MS SEMS Zinc	MAS1008-04
4	1	VUK Coil Retaining Bracket	MTL0061-00
5	1	Switch Protect Plate No Tap	MTL0068-01
7		VUK Plunger	PLS0030-00
8	1	Coil Sleeve 1-13/16” With 1/8” Flange	PLS0030-00
9	5	#8 1/2” HWH SMS Zinc	SMS2008-08
10	1	VUK Spring	SPR0001-00
11	1	VUK Switch	SWI0015-00
12	1	1/2” ID Coil Spring Washer	WAS4000-08
13	2	2-556 X 1/2” HWH TFS 3/16 Hex Head	TFS-2002-08

Figure 7.36 Post Locations

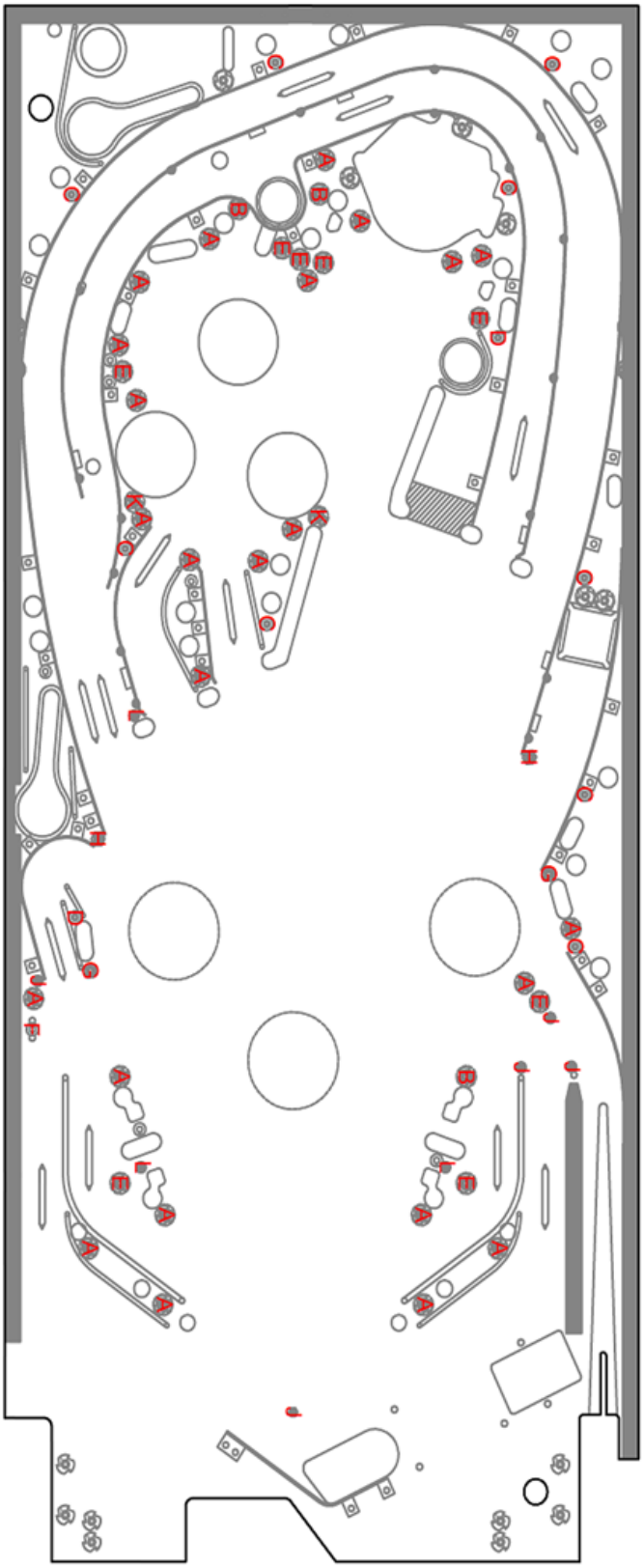

A (24X) PST0001-00 CLEAR POST
PST0003-00 POST FASTENING SCREW (STD MTG)

B (3X) PST0001-00 CLEAR POST
PST0003-01 POST FASTENING SCREW (RAMP MTG)

C (9X) PST0001-00 CLEAR POST
PST0003-02 POST FASTENING SCREW (WOOD)

D (2X) PST0001-00 CLEAR POST
SMS0008-24 #8 X 1 1/2 PPH SMS

E (8X) PST0001-00 CLEAR POST
MAS0008-24 8-32 X 1 1/2 PPH MS

F (1X) PST0001-00 CLEAR POST
MAS0008-32 8-32 X 2 PPH MS
WAS0008-00 #8 WASHER
NUT0008-00 8-32 NYLON LOCK NUT - LOW PROFILE

G (2X) PST0004-01 5/16 HEX SLEEVE POST (STD)

H (2X) PST0004-00 5/16 HEX SLEEVE POST (PLAIN)

J (5X) PST0002-00 10-32 MINIPOST (FULL THREAD)

K (2X) PST0002-01 10-32 MINIPOST (HALF THREAD)

L (3X) PST0002-02 MINIPOST (WOOD)

Figure 7.37 Rubber Ring Locations

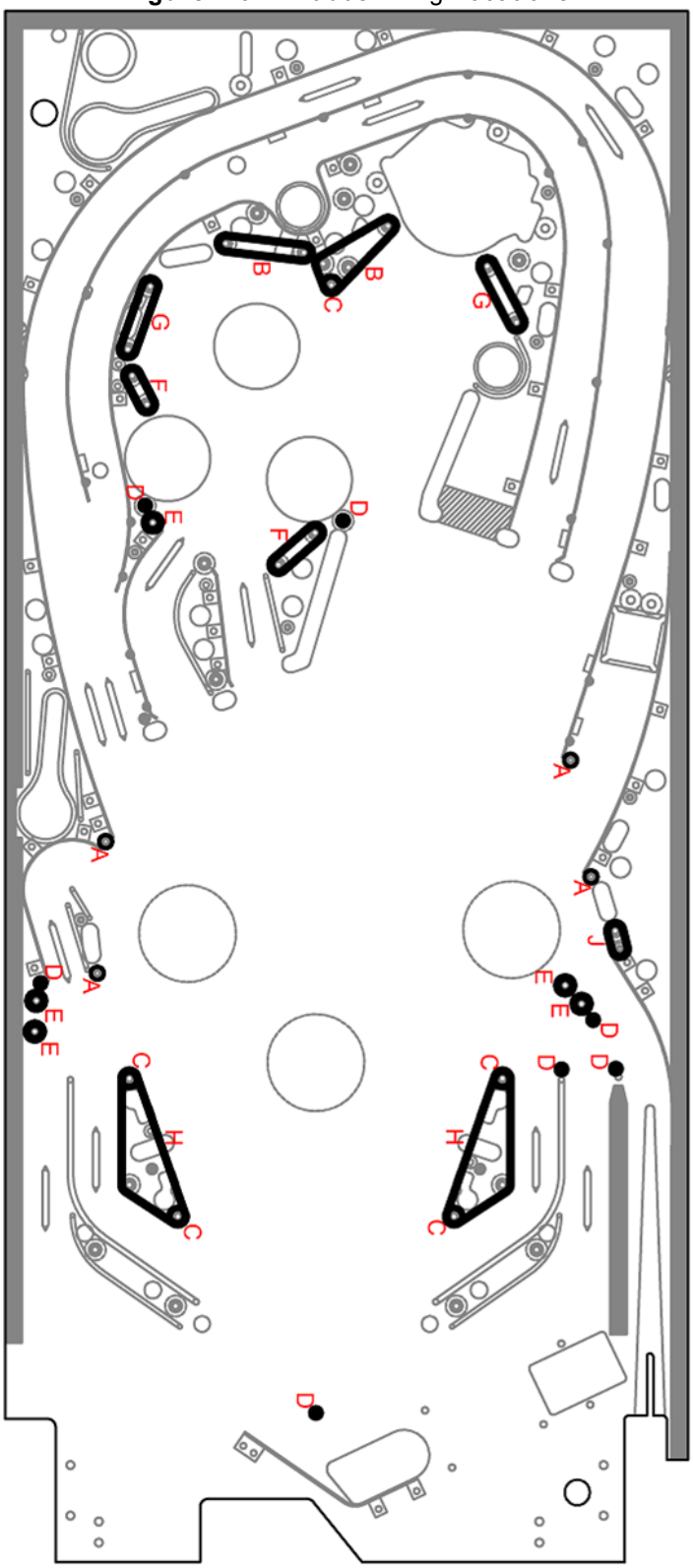

A (4X) RBR0005-07 POST SLEEVE RUBBER - PURPLE

B (2X) RBR0001-08 1 1/2 ID RUBBER RING - BLACK

C (5X) RBR0013-00 HALF POST SLEEVE RUBBER - BLACK

D (7X) RBR0003-01 7/16 OD MINI-POST RUBBER - BLACK

E (5X) RBR0001-02 3/16 ID RUBBER RING - BLACK

F (2X) RBR0001-05 3/4 ID RUBBER RING - BLACK

G (2X) RBR0001-07 1 1/4 ID RUBBER RING - BLACK

H (2X) RBR0001-12 2 1/2 ID RUBBER RING - BLACK

J (1X) RBR0001-01 7/16 ID RUBBER RING - BLACK

HOUDINI GAME RULES

8

HOUDINI GAME RULES OVERVIEW

SKILL SHOT

Shoot the moving red target to earn the skill shot award. Shoot the moving green target to earn the super skill shot.

STAGE MODES

The stage opens in one of the following ways:

- Bash the stage ten times.
- Shoot the stage through Stage Alley.
- Hit the red stand-up target directly via a shot straight up Key Lane.
- Hit the red stand-up target ten times from the pops.
- Also, starting any Stage Mode by shooting the stage through Stage Alley doubles the mode's value.

ADDITIONAL NOTES

- All Stage, FILM, and Escape introductions can be "flipper escaped." During the introduction to a mode, hold both flippers at the same time to override the introduction.

Note: The Magic Shop introduction cannot be "flipper escaped."

- There are ten modes at the stage; seven are "Basic Stage Modes", meaning a series of shots are required to complete.
- There are three "Special Stage Modes". Complete all ten modes to earn a HOUDINI letter.
- Typically, making the required shot advances the player through the illusion/escape, which is demonstrated on the display.

BASIC STAGE MODES

Table 8.1 Basic Stage Modes

Chinese Water Torture	Hit the key lane to lower Houdini into the tank. Hit either orbit to close the curtain stage and to open the curtain and set Houdini free.
Handcuff King	Shoot the pops. Every ten hits results in a handcuff or chain being thrown out. Hit it enough times to “free” Houdini.
Indian Needle Trick	All switches score X, magic and red stand-up targets increase value. Houdini pulls needles out of his mouth as shots are made.
Metamorphosis	Shoot the trunk to lower Houdini into the trunk, then orbit to close the curtain, then hit the stage or trunk to open the curtain to set Houdini free.
Milkcan Escape	Three shots through the lower left loop lowers Houdini into a milkman, rolls out the screen, and shows that he is free.
Vanishing Elephant	Three ramp shots move the elephant into the crate, then hit the stage to show that the crate is empty.
Walk Through Walls	To move Houdini through the wall, shoot one of the left shots, then one of center shots, then one of the right shots.

SPECIAL STAGE MODES

Figure 8.1 Bullet Catch Mode

Table 8.2 Special Stage Modes

Bullet Catch	Shoot the trunk to lock a ball in the upper catapult, then shoot moving the target to lock in the site (and jackpot value, which is decreasing while trying to hit the moving shot). Locking the site fires the gun, to get into a two ball multiball. Then continue to hit the trunk shot (right inner loop) to lock and fire the gun again to score jackpots.
Card King	This is a video mode. The player throws cards (known as scaling) through moving hoops. The longer the player holds the flipper button before throwing, the greater the arc of the released card. As you make shots, the hoops move faster. Making three of the smaller hoops lights the smaller hoop for an extra ball award. It is possible to make both hoops with a single throw, which doubles their value.
Straight Jacket Multiball	The option of “reversed flippers” (left flipper button controls right flipper, right controls left) or “reversed and inverted flippers”, where flippers are reversed as described, but are inverted, which means they are the in up position and then drop when the flipper button is pressed, so they flip upon release. Jackpots are doubled when inverted.

MOVIE MODES

There are five modes based on Houdini’s movies. These modes are presented in black and white, with an old-time film look and a piano accompaniment. Failing to complete a Movie mode results in the film “burning” on the display screen. Complete all five Movie modes to earn a HOUDINI letter.

Table 8.3 Movie Modes

Grim Game	Move Houdini from plane-to-plane to rescue the woman (orbit, ramp, orbit).
Haldane of Secret Service	All about the spinner — Escape the waterwheel. Each shot makes it spin faster until it breaks free.
Man From Beyond	This is an add-a-ball mode. First, bash the stage to free Houdini from the ice, where he has been frozen for 100 years.This puts a second ball in play. Then shoot orbits X times to free him from his restraints in the insane asylum. Another ball is put into play, then all the GI and inserts turn off, except for three shots (and a moving spotlight that runs through the inserts. Only one of the three lit shots pays off. The player must figure out which is the correct shot by sneaking a peek at the display and spotting Houdini when the spotlight is on him. Shooting the correct shot scores a jackpot, and then Houdini randomly moves between the three shots.
Master Mystery	Features “Q The Automaton”, the first ever movie robot. Stop him from getting the woman or getting to the weapon — left orbit, right orbit, left orbit, right orbit. The player only has seconds to complete the next shot in the sequence. Making this shot resets the clock (but less time than the previous shot).
Terror Island	Scoop, ramp, scoop, ramp — Free the woman from the safe that was thrown in the ocean, then go back for the treasure.

MAGIC SHOP

Magic Shop opens when the player hits a spinner shot and earns a “Mystery” award. Collect eight items to earn a HOUDINI letter. The player can earn an extra ball if enabled in Feature Adjustment Settings\Magic Shop Extra Ball.

Note: Refer to the Feature Adjustments Settings table in the Service Menu chapter for a description of this setting.

JAIL ESCAPE HURRY-UPS

Spell E-S-C-A-P-E from stand-up target hits. Complete all five Jail Escape Hurry-Ups to earn a Houdini letter, complete X to earn Return From Beyond. It is also possible to earn an extra ball if enabled in Feature Adjustment Settings.Complete all five Jail Escape Hurry-Ups for Mini-Magician Mode.

Figure 8.2 Jail Escape Hurry-Up

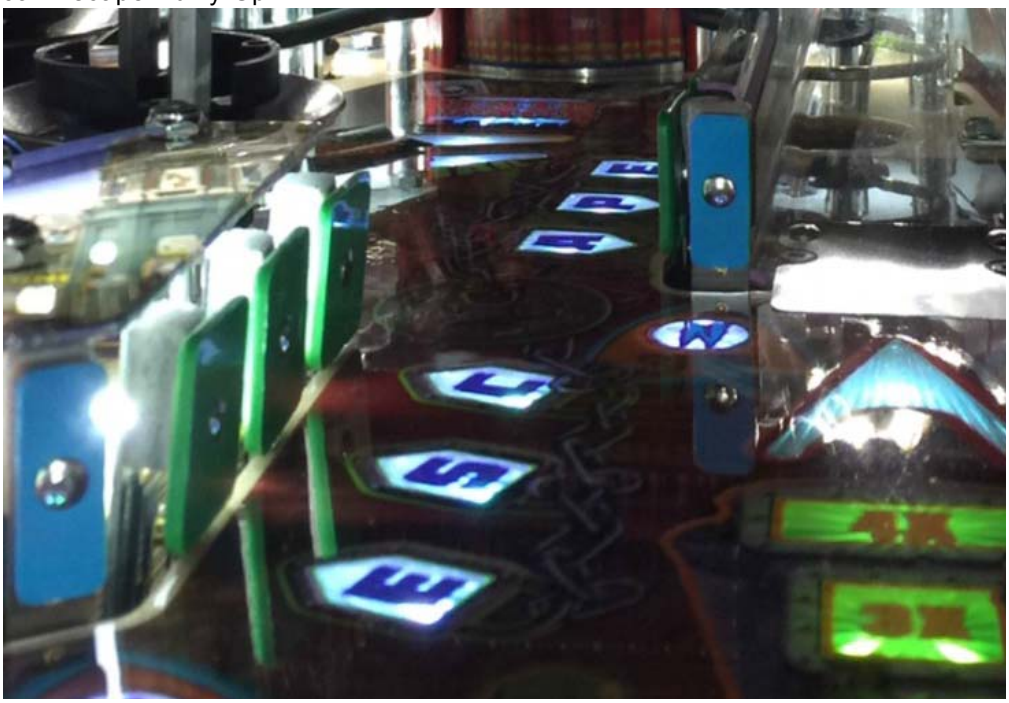

SECRET MISSIONS

There are five different combos and only one is active at a time. Complete the active combo to start the next one. Complete all five to enter a Mini-Magician Mode and earn a Houdini letter. The next shot in the sequence is identified by a flashing purple arrow. If the sequence is broken, it returns to the first shot of the sequence.
The missions increase in difficulty.

TRUNK MULTIBALL

Lock three balls in the trunk to start Trunk Multiball. Three shots are lit for jackpots. Complete those shots then shoot the trunk (via the inner loop) to achieve Super Jackpot and re-light jackpots. Super Jackpot earns a Houdini letter.

SEANCE MULTIBALL

Spell S-E-A-N-C-E to light at the scoop and score jackpots. Spell in order to earn Super Jackpot. Lighting SEANCE Multiball increases in difficulty each time. X jackpots earns a HOUDINI letter.

Figure 8.3 SEANCE Multiball

OUTLANE DRAIN MODES

Complete the modes and play continues. Fail either of the modes and the ball ends. The modes are:

Table 8.4 Outlane Drain Modes

Escape Death	The player gets 30 seconds to spell ESCAPE (via stand-up targets). Earned by completing X Jail Escape Hurry-ups.
Return From Beyond	The player gets 30 flips to spell SEANCE (via mini stand-up targets). Earned by scoring X jackpots during SEANCE Multiball.

Figure 8.4 Outlane Drain Modes

The player can also earn/light the Outlane Drain Modes at Magic Shop. If earned there, the ability to select the mode moves from side-to-side with the flippers. If earned via SEANCE or ESCAPE, the option is static. If the player has earned multiple Magic Shops, then both outlanes are lit. The player can earn one of each Outlane Modes per game.

MILKCAN MULTIPLIERS

Shooting the milkman loop (lower left loop), immediately followed by the ramp, increases the playfield multiplier (2x,3x,4x) for X seconds.

Figure 8.5 Milkcan Multiplier

MASTER MAGICIAN (WIZARD) MODE

You must collect all HOUDINI letters

- Complete all ten Stage modes
- Complete all five Movie modes
- Collect eight items from the Magic Shop
- Complete all five Jail Escape Hurry-ups
- Complete all five Secret Missions
- Earn a super jackpot during Trunk Multiball
- Earn a certain number of jackpots during Seance Multiball

Note: Settings can be adjusted to increase or decrease the difficulty by which HOUDINI letters are earned. Refer to the Feature Adjustments Settings table in the Service Menu chapter for a description of this setting.

STACKING

The player can stack multiballs in both Stage and Movie Modes as well as other multiballs. Stage Modes and Movie Modes cannot be stacked with each other. Once a multiball is running, the player cannot start a Movie or Stage Mode. Jail Escape Hurry-ups, starting Secret Missions and Magic Shop visits can occur if a mode is running, but not if multiball is running.

Almost every Stage (not the video mode) and Movie Mode can be stacked with either Trunk Multiball or Seance Multiball, but the mode must be started first. All modes benefit from stacking, with Indian Needle Trick being the one with the most upside from stacking. Multiball can be stacked with each other, including three different triple stacks of Straight Jacket Multiball with Seance and Trunk or Bullet Catch with trunk and Seance or Man from Beyond with Seance and Trunk.

Jail Escape Hurry Ups are also stackable, and can be started after a mode has started (not after a multiball). Secret Mission combos are always active once they are started (and can be started during modes), although those do not typically benefit from a multiball.

A recommended strategy is to lock two balls in the trunk, then light a Movie Mode by spelling FILM at the lower lanes. Then shoot the right inner loop, which starts the Movie Mode and Trunk Multiball at the same time.

HOUDINI CODE UPDATE

9

CODE UPDATE PROCEDURE

Please have the following items available before performing a code update:

- A FAT 32 formatted 2.0 USB drive with at least 8 GB of storage
- Latest version of game code, which can be downloaded from https://www.american-pinball.com/support/updates/ your computer.

Video showing how to update gamecode: https://youtu.be/_n4-7ZSH3UE

Having issues with your USB drive not being read by the game?
Instructions to completely wipe the drive:
http://s4.american-pinball.com/img/support/2021-2/USB-drive-formatting-procedure.pdf

WARNING! **OPENING THE COIN DOOR EXPOSES HIGH VOLTAGE PARTS IN THE GAME, AND DIRECT CONTACT TO THESE HIGH VOLTAGE PARTS CAN LEAD TO SERIOUS OR FATAL INJURIES. THIS EQUIPMENT IS ONLY TO BE SERVICED BY TRAINED PROFESSIONALS ONLY.**

To download Houdini Code to a Microsoft Windows PC

1. **Go to www.american-pinball.com/support/updates/.**
2. **Compare the game version on your machine to the most current version available on the site.**

   The most current version of released Houdini code is located at the top of the page.
3. **If your machine is running the most current version of code, enjoy your game! Otherwise, proceed to the next step.**
4. **Insert a formatted USB drive with at least 4Gb of storage into your computer.**
5. **From File Explorer, right-click on the USB drive.**
6. **Select Format Drive FAT 32.**

To download Houdini Code to a MAC

1. **Go to www.american-pinball.com/support/updates/.**
2. **Compare the game version on your machine to the most current version available on the site.**

   The most current version of released Houdini code is located at the top of the page.
3. **If your machine is running the most current version of code, enjoy your game! Otherwise, proceed to the next step.**
4. **Insert a formatted USB drive with at least 4Gb of storage into your computer.**
5. **Open Disk Utilities.**
6. **Select Drive.**
7. **Select Erase.**
8. **Select Format Drive FAT 32.**

To update Houdini code

1. **Copy the Houdini update package code file (houdini-game.pkg) to the USB drive.**
2. **Open the coin door and locate the provided USB extension cable on the right had side of the coin door below the flipper switch.**
3. **Insert the USB device with the code update package into the USB extension cable.**
4. **If Houdini's power is turned off, turn it on.**

   Houdini will recognize the code and provide a message on the main LCD that indicates that the codes is updating.

Figure 9.1 Houdini Code Update Message

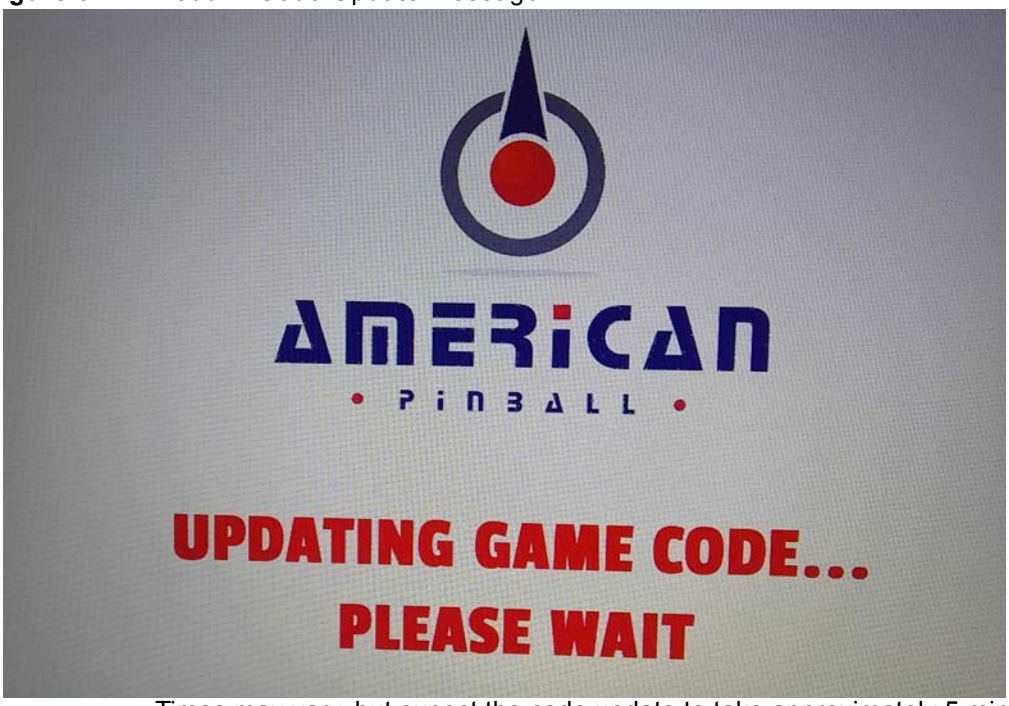

Times may vary, but expect the code update to take approximately 5 minutes.

Figure 9.2 Houdini Code Update Complete

When the code update process completes an “Update Complete!” message appears.

5 **Remove the USB drive from the USB extension cable.**

6 **Turn Houdini’s power off and then turn it on.**

7 **Enjoy your next game!**

Note: After upgrading Houdini code, the USB device will contain audits and settings information. In the case of a full system update, these files are used to restore settings and audit history.

Note: The version of code is displayed during the machine's startup and from the API cockpit.

HOUDINI LOG COPY

To assist in game development and troubleshooting, American Pinball may ask for a copy of the game logs.

To copy game logs

1. **Open the coin door and locate the provided USB extension cable.**
2. **Insert the USB device into the supplied USB extension cable that is located inside the coin door.**
3. **If Houdini's power is turned off, turn it on.**
4. **Wait for the completion screen on the main display screen and remove the USB device.**
5. **Power cycle the game.**

MISCELLANEOUS DIAGRAMS

10

ABOUT THIS CHAPTER

This chapter is devoted to diagrams and charts that do not necessarily fall into a specific chapter but are important for your overall knowledge.

The following diagrams are included in this chapter:

Page	Diagram Name
Page 2	Houdini Cabinet Diagram
Page 3	Houdini Power Block Diagram
Page 3	Houdini Transformer Diagram
Page 4	Houdini Transformer Wiring Diagram
Page 5	Houdini Dipswitch Settings Diagram

Figure 10.1 Cabinet Diagram

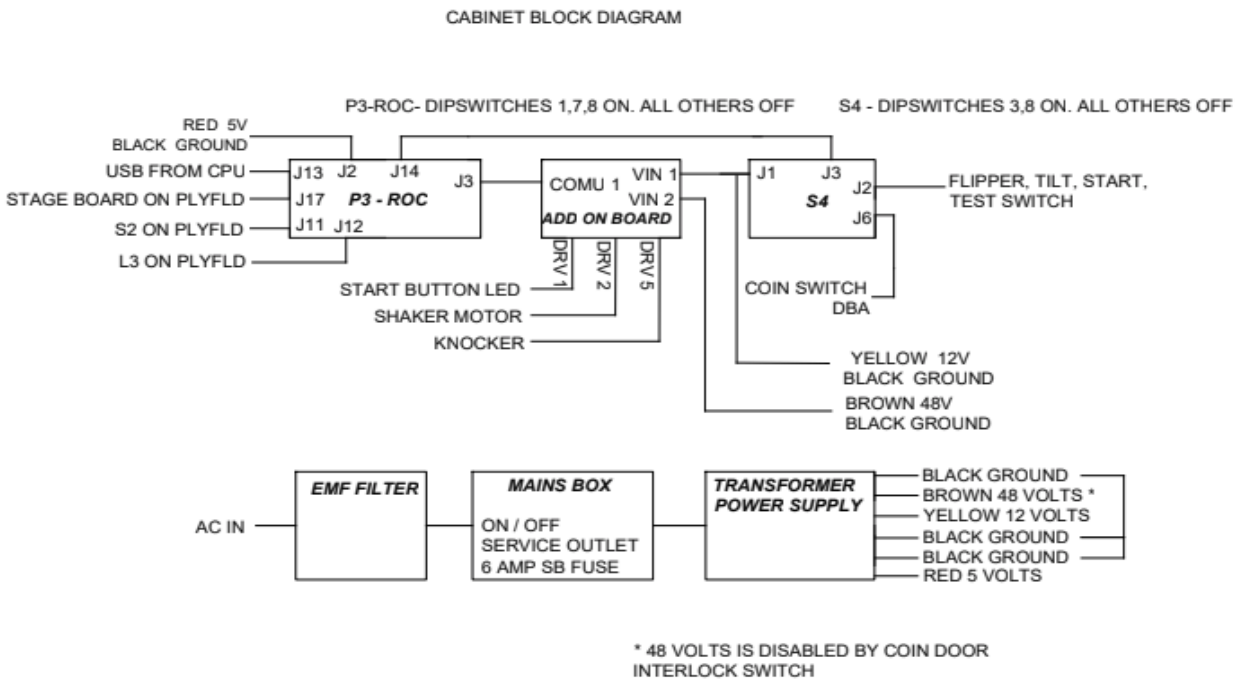

Figure 10.2 Power Block Diagram

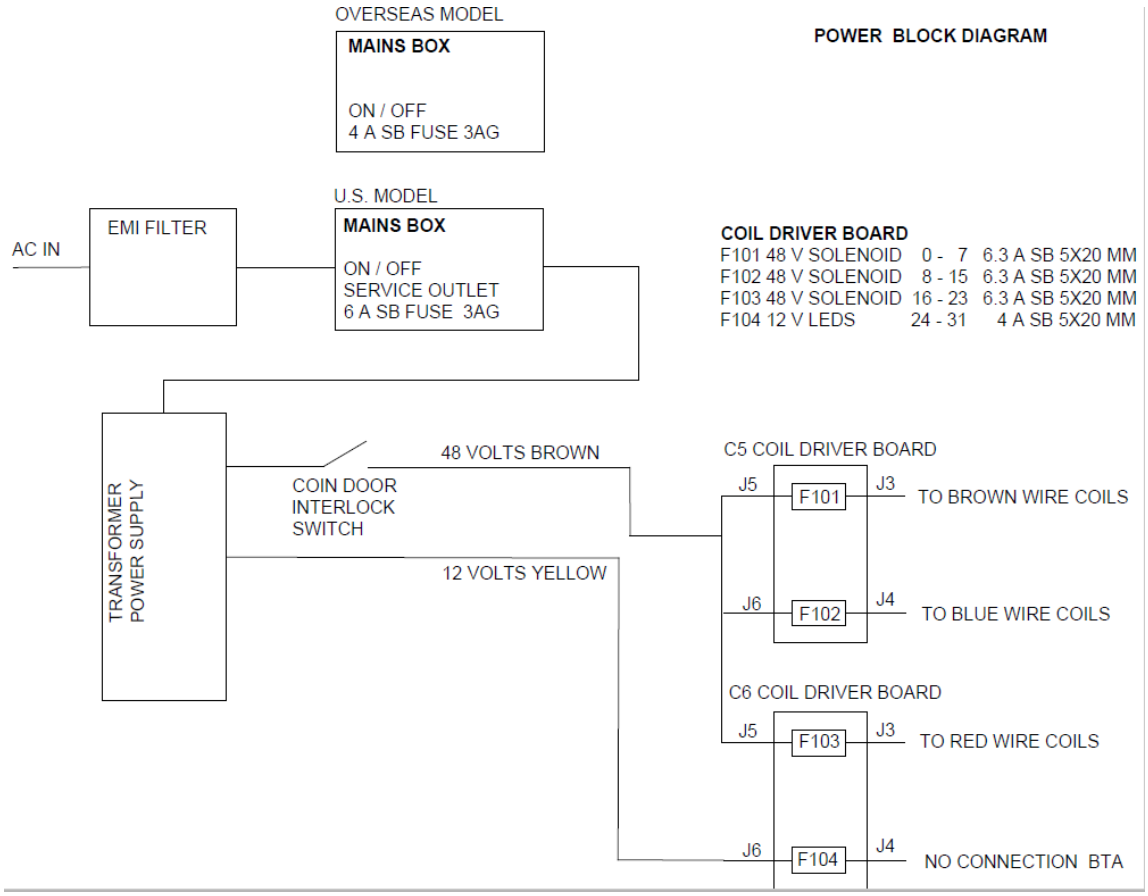

Figure 10.3 Transformer Diagram

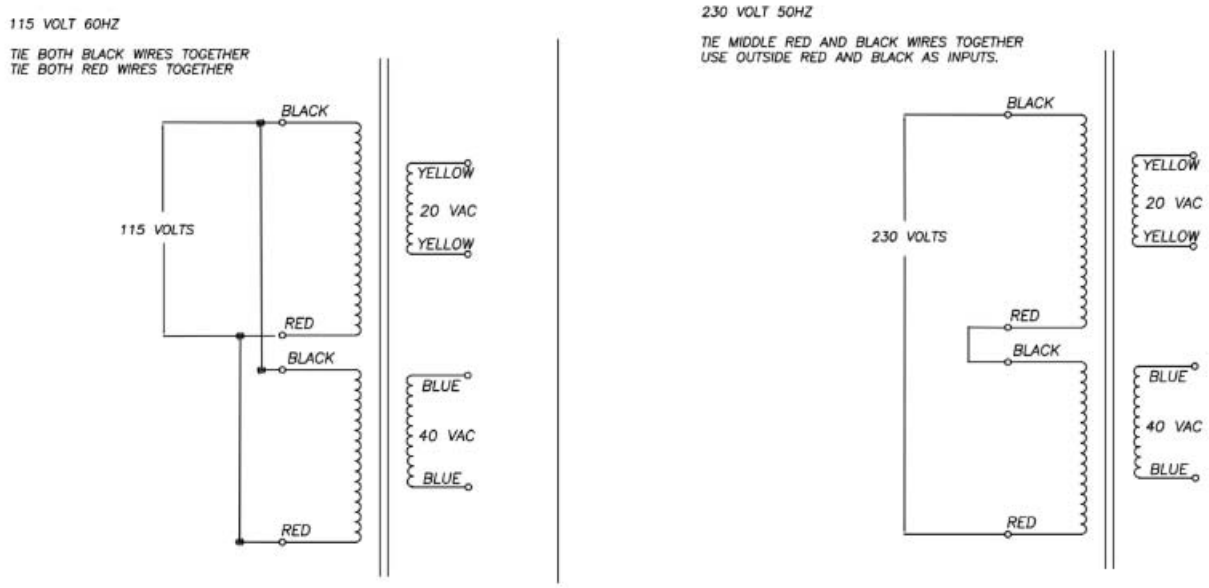

Figure 10.4 Transformer Wiring Diagram

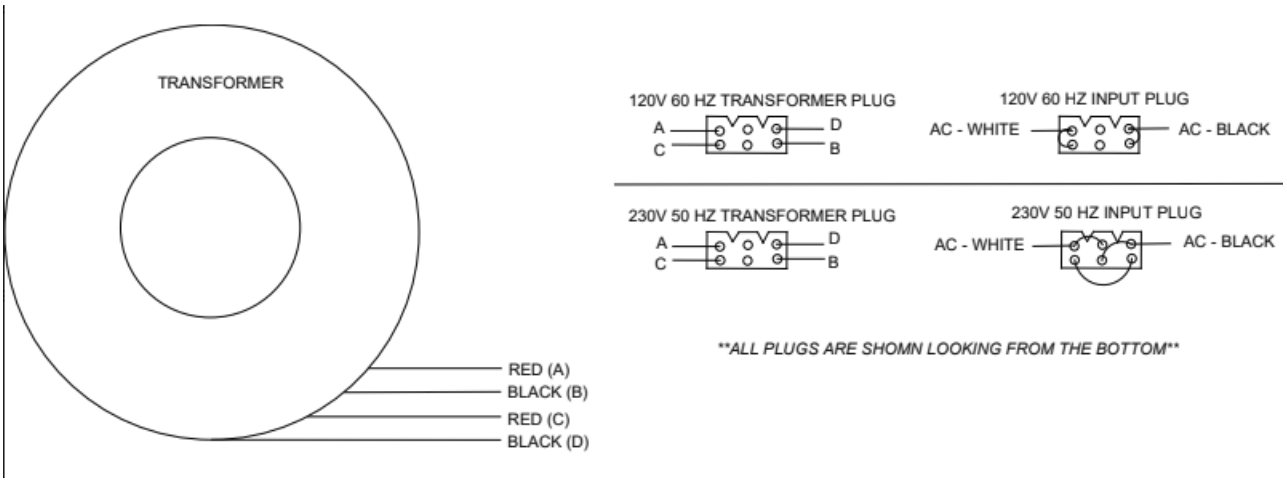

Figure 10.5 Dipswitch Settings Diagram

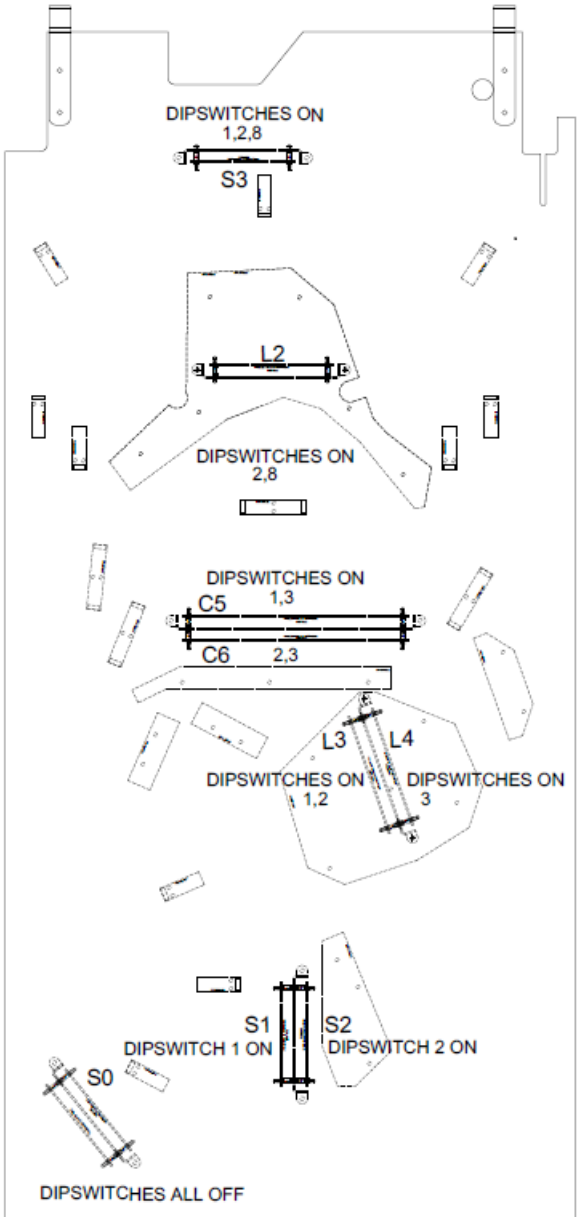

Note: Please refer to the Fuse table in the Coil Locations chapter for a list of fuses used in Houdini.

Part Number DOC0001-03
For Support Call: 833-API-HELP